Freescale Semiconductor
Data Sheet: Technical Data

Document Number: K20P81M72SF1
Rev. 2, 4/2012

K20P81M72SF1

K20 Sub-Family

Supports: MK20DX64VLK7, MK20DX128VLK7, MK20DX256VLK7, MK20DX64VMB7, MK20DX128VMB7, MK20DX256VMB7

Features

- Operating Characteristics
  - Voltage range: 1.71 to 3.6 V
  - Flash write voltage range: 1.71 to 3.6 V
  - Temperature range (ambient): -40 to 105°C
- Clocks
  - 3 to 32 MHz crystal oscillator
  - 32 kHz crystal oscillator
  - Multi-purpose clock generator
- System peripherals
  - 10 low-power modes to provide power optimization based on application requirements
  - 16-channel DMA controller, supporting up to 63 request sources
  - External watchdog monitor
  - Software watchdog
  - Low-leakage wakeup unit
- Security and integrity modules
  - Hardware CRC module to support fast cyclic redundancy checks
  - 128-bit unique identification (ID) number per chip
- Human-machine interface
  - Low-power hardware touch sensor interface (TSI)
  - General-purpose input/output
- Analog modules
  - Two 16-bit SAR ADCs
  - Programmable gain amplifier (PGA) (up to x64) integrated into each ADC
  - 12-bit DAC
  - Three analog comparators (CMP) containing a 6-bit DAC and programmable reference input
  - Voltage reference
- Timers
  - Programmable delay block
  - Eight-channel motor control/general purpose/PWM timer
  - Two 2-channel quadrature decoder/general purpose timers
  - Periodic interrupt timers
  - 16-bit low-power timer
  - Carrier modulator transmitter
  - Real-time clock
- Communication interfaces
  - USB full-/low-speed On-the-Go controller with on-chip transceiver
  - Controller Area Network (CAN) module
  - Two SPI modules
  - Two I2C modules
  - Four UART modules
  - I2S module

Freescale reserves the right to change the detail specifications as may be required to permit improvements in the design of its products.

© 2012 Freescale Semiconductor, Inc.

Table of Contents

1 Ordering parts....3
1.1 Determining valid orderable parts....3
2 Part identification....3
2.1 Description....3
2.2 Format....3
2.3 Fields....3
2.4 Example....4
3 Terminology and guidelines....4
3.1 Definition: Operating requirement....4
3.2 Definition: Operating behavior....5
3.3 Definition: Attribute....5
3.4 Definition: Rating....6
3.5 Result of exceeding a rating....6
3.6 Relationship between ratings and operating requirements....6
3.7 Guidelines for ratings and operating requirements....7
3.8 Definition: Typical value....7
3.9 Typical value conditions....8
4 Ratings....9
4.1 Thermal handling ratings....9
4.2 Moisture handling ratings....9
4.3 ESD handling ratings....9
4.4 Voltage and current operating ratings....9
5 General....10
5.1 AC electrical characteristics....10
5.2 Nonswitching electrical specifications....11
5.2.1 Voltage and current operating requirements....11
5.2.2 LVD and POR operating requirements....12
5.2.3 Voltage and current operating behaviors....12
5.2.4 Power mode transition operating behaviors....13
5.2.5 Power consumption operating behaviors....14
5.2.6 Designing with radiated emissions in mind....18
5.2.7 Capacitance attributes....18
5.3 Switching specifications....19
5.3.1 Device clock specifications....19
5.3.2 General switching specifications....19
5.4 Thermal specifications....20
5.4.1 Thermal operating requirements....21
5.4.2 Thermal attributes....21
6 Peripheral operating requirements and behaviors....22
6.1 Core modules....22
6.1.1 Debug trace timing specifications....22
6.1.2 JTAG electricals....23
6.2 System modules....25
6.3 Clock modules....25
6.3.1 MCG specifications....25
6.3.2 Oscillator electrical specifications....28
6.3.3 32kHz Oscillator Electrical Characteristics....30
6.4 Memories and memory interfaces....31
6.4.1 Flash electrical specifications....31
6.4.2 EzPort Switching Specifications....35
6.4.3 Flexbus Switching Specifications....36
6.5 Security and integrity modules....39
6.6 Analog....39
6.6.1 ADC electrical specifications....39
6.6.2 CMP and 6-bit DAC electrical specifications....48
6.6.3 12-bit DAC electrical characteristics....50
6.6.4 Voltage reference electrical specifications....53
6.7 Timers....54
6.8 Communication interfaces....55
6.8.1 USB electrical specifications....55
6.8.2 USB DCD electrical specifications....55
6.8.3 USB VREG electrical specifications....55
6.8.4 CAN switching specifications....56
6.8.5 DSPI switching specifications (limited voltage range)....56
6.8.6 DSPI switching specifications (full voltage range)....58
6.8.7 I2C switching specifications....59
6.8.8 UART switching specifications....60
6.8.9 I2S/SAI Switching Specifications....60
6.9 Human-machine interfaces (HMI)....64
6.9.1 TSI electrical specifications....64
7 Dimensions....65
7.1 Obtaining package dimensions....65
8 Pinout....65
8.1 K20 Signal Multiplexing and Pin Assignments....65
8.2 K20 Pinouts....70
9 Revision History....72

1 Ordering parts

1.1 Determining valid orderable parts

Valid orderable part numbers are provided on the web. To determine the orderable part numbers for this device, go to http://www.freescale.com and perform a part number search for the following device numbers: PK20 and MK20 .

2 Part identification

2.1 Description

Part numbers for the chip have fields that identify the specific part. You can use the values of these fields to determine the specific part you have received.

2.2 Format

Part numbers for this device have the following format:

Q K## A M FFF R T PP CC N

2.3 Fields

This table lists the possible values for each field in the part number (not all combinations are valid):

Field	Description	Values
Q	Qualification status	• M = Fully qualified, general market flow • P = Prequalification
K##	Kinetis family	• K20
A	Key attribute	• D = Cortex-M4 w/ DSP • F = Cortex-M4 w/ DSP and FPU
M	Flash memory type	• N = Program flash only • X = Program flash and FlexMemory

Table continues on the next page...

Field	Description	Values
FFF	Program flash memory size	• 32 = 32 KB • 64 = 64 KB • 128 = 128 KB • 256 = 256 KB • 512 = 512 KB • 1M0 = 1 MB
R	Silicon revision	• Z = Initial • (Blank) = Main • A = Revision after main
T	Temperature range (°C)	• V = –40 to 105 • C = –40 to 85
PP	Package identifier	• FM = 32 QFN (5 mm x 5 mm) • FT = 48 QFN (7 mm x 7 mm) • LF = 48 LQFP (7 mm x 7 mm) • LH = 64 LQFP (10 mm x 10 mm) • MP = 64 MAPBGA (5 mm x 5 mm) • LK = 80 LQFP (12 mm x 12 mm) • MB = 81 MAPBGA (8 mm x 8 mm) • LL = 100 LQFP (14 mm x 14 mm) • ML = 104 MAPBGA (8 mm x 8 mm) • MC = 121 MAPBGA (8 mm x 8 mm) • LQ = 144 LQFP (20 mm x 20 mm) • MD = 144 MAPBGA (13 mm x 13 mm) • MJ = 256 MAPBGA (17 mm x 17 mm)
CC	Maximum CPU frequency (MHz)	• 5 = 50 MHz • 7 = 72 MHz • 10 = 100 MHz • 12 = 120 MHz • 15 = 150 MHz
N	Packaging type	• R = Tape and reel • (Blank) = Trays

2.4 Example

This is an example part number:

MK20DN512ZVMD10

3 Terminology and guidelines

3.1 Definition: Operating requirement

An *operating requirement* is a specified value or range of values for a technical characteristic that you must guarantee during operation to avoid incorrect operation and possibly decreasing the useful life of the chip.

3.1.1 Example

This is an example of an operating requirement, which you must meet for the accompanying operating behaviors to be guaranteed:

Symbol	Description	Min.	Max.	Unit
V_{DD}	1.0 V core supply voltage	0.9	1.1	V

3.2 Definition: Operating behavior

An *operating behavior* is a specified value or range of values for a technical characteristic that are guaranteed during operation if you meet the operating requirements and any other specified conditions.

3.2.1 Example

This is an example of an operating behavior, which is guaranteed if you meet the accompanying operating requirements:

Symbol	Description	Min.	Max.	Unit
I_{WP}	Digital I/O weak pullup/ pulldown current	10	130	μA

3.3 Definition: Attribute

An *attribute* is a specified value or range of values for a technical characteristic that are guaranteed, regardless of whether you meet the operating requirements.

3.3.1 Example

This is an example of an attribute:

Symbol	Description	Min.	Max.	Unit
CIN_D	Input capacitance: digital pins	—	7	pF

3.4 Definition: Rating

A *rating* is a minimum or maximum value of a technical characteristic that, if exceeded, may cause permanent chip failure:

- *Operating ratings* apply during operation of the chip.
- *Handling ratings* apply when the chip is not powered.

3.4.1 Example

This is an example of an operating rating:

Symbol	Description	Min.	Max.	Unit
V_{DD}	1.0 V core supply voltage	–0.3	1.2	V

3.5 Result of exceeding a rating

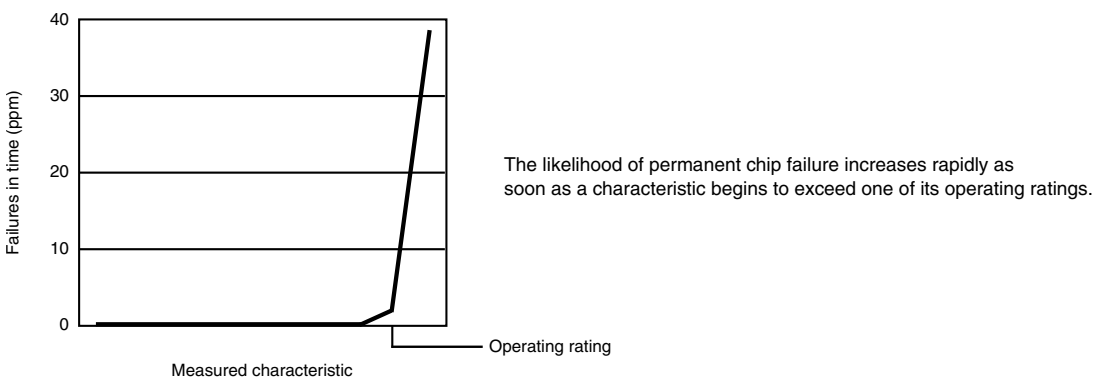

3.6 Relationship between ratings and operating requirements

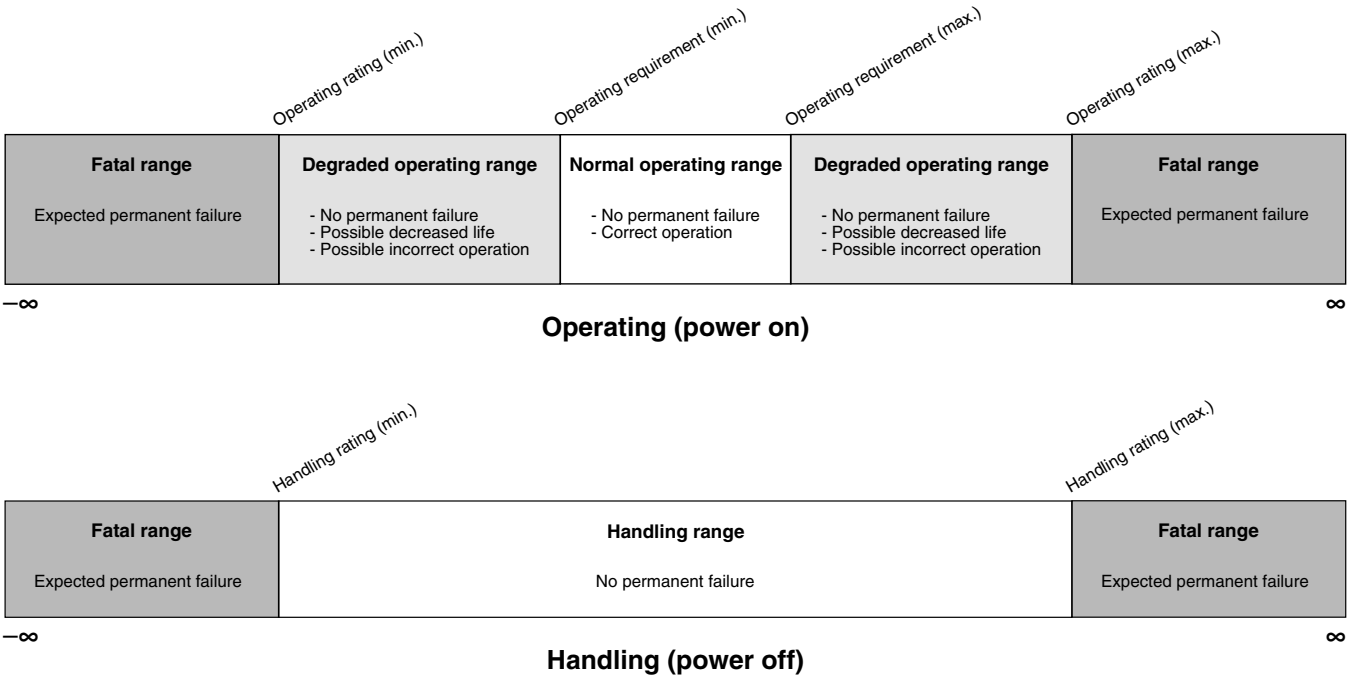

3.7 Guidelines for ratings and operating requirements

Follow these guidelines for ratings and operating requirements:

- Never exceed any of the chip's ratings.
- During normal operation, don't exceed any of the chip's operating requirements.
- If you must exceed an operating requirement at times other than during normal operation (for example, during power sequencing), limit the duration as much as possible.

3.8 Definition: Typical value

A *typical value* is a specified value for a technical characteristic that:

- Lies within the range of values specified by the operating behavior
- Given the typical manufacturing process, is representative of that characteristic during operation when you meet the typical-value conditions or other specified conditions

Typical values are provided as design guidelines and are neither tested nor guaranteed.

3.8.1 Example 1

This is an example of an operating behavior that includes a typical value:

Symbol	Description	Min.	Typ.	Max.	Unit
I_{WP}	Digital I/O weak pullup/pulldown current	10	70	130	µA

3.8.2 Example 2

This is an example of a chart that shows typical values for various voltage and temperature conditions:

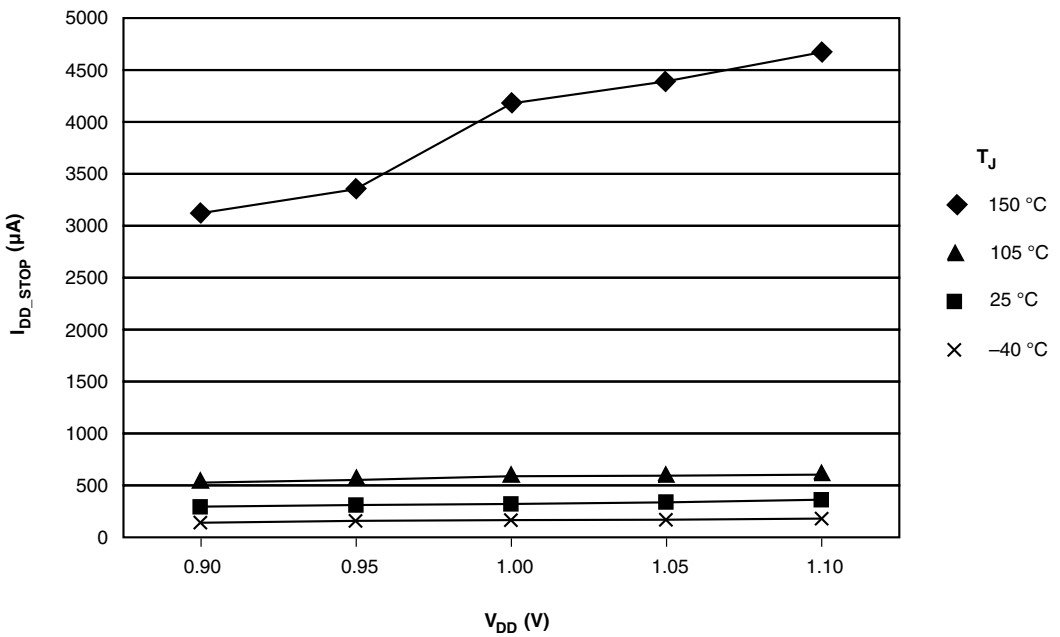

3.9 Typical value conditions

Typical values assume you meet the following conditions (or other conditions as specified):

Symbol	Description	Value	Unit
T_A	Ambient temperature	25	°C
V_{DD}	3.3 V supply voltage	3.3	V

4 Ratings

4.1 Thermal handling ratings

Symbol	Description	Min.	Max.	Unit	Notes
T_{STG}	Storage temperature	–55	150	°C	1
T_{SDR}	Solder temperature, lead-free	—	260	°C	2

1. Determined according to JEDEC Standard JESD22-A103, *High Temperature Storage Life*.
2. Determined according to IPC/JEDEC Standard J-STD-020, *Moisture/Reflow Sensitivity Classification for Nonhermetic Solid State Surface Mount Devices*.

4.2 Moisture handling ratings

Symbol	Description	Min.	Max.	Unit	Notes
MSL	Moisture sensitivity level	—	3	—	1

1. Determined according to IPC/JEDEC Standard J-STD-020, *Moisture/Reflow Sensitivity Classification for Nonhermetic Solid State Surface Mount Devices*.

4.3 ESD handling ratings

Symbol	Description	Min.	Max.	Unit	Notes
V_{HBM}	Electrostatic discharge voltage, human body model	-2000	+2000	V	1
V_{CDM}	Electrostatic discharge voltage, charged-device model	-500	+500	V	2
I_{LAT}	Latch-up current at ambient temperature of 105°C	-100	+100	mA	

1. Determined according to JEDEC Standard JESD22-A114, *Electrostatic Discharge (ESD) Sensitivity Testing Human Body Model (HBM)*.
2. Determined according to JEDEC Standard JESD22-C101, *Field-Induced Charged-Device Model Test Method for Electrostatic-Discharge-Withstand Thresholds of Microelectronic Components*.

4.4 Voltage and current operating ratings

Symbol	Description	Min.	Max.	Unit
V_{DD}	Digital supply voltage	–0.3	3.8	V

Table continues on the next page...

Symbol	Description	Min.	Max.	Unit
I_{DD}	Digital supply current	—	185	mA
V_{DIO}	Digital input voltage (except $\overline{RESET}$, EXTAL, and XTAL)	–0.3	5.5	V
V_{AIO}	Analog[1], $\overline{RESET}$, EXTAL, and XTAL input voltage	–0.3	V_{DD} + 0.3	V
I_D	Maximum current single pin limit (applies to all port pins)	–25	25	mA
V_{DDA}	Analog supply voltage	V_{DD} – 0.3	V_{DD} + 0.3	V
V_{USB_DP}	USB_DP input voltage	–0.3	3.63	V
V_{USB_DM}	USB_DM input voltage	–0.3	3.63	V
VREGIN	USB regulator input	–0.3	6.0	V
V_{BAT}	RTC battery supply voltage	–0.3	3.8	V

1. Analog pins are defined as pins that do not have an associated general purpose I/O port function.

5 General

5.1 AC electrical characteristics

Unless otherwise specified, propagation delays are measured from the 50% to the 50% point, and rise and fall times are measured at the 20% and 80% points, as shown in the following figure.

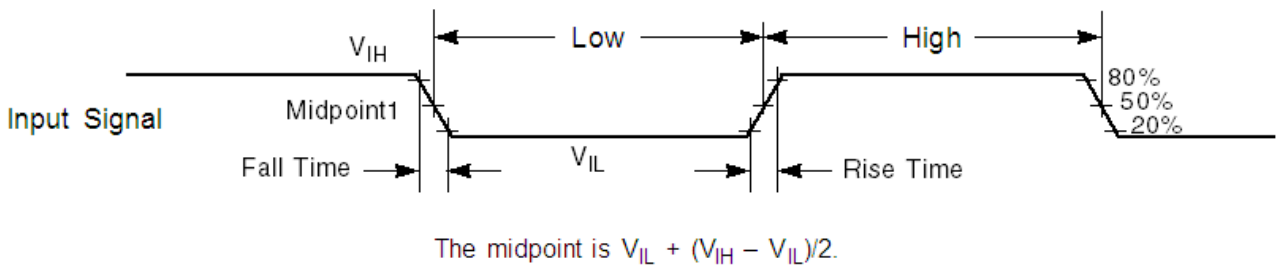

Figure 1. Input signal measurement reference

All digital I/O switching characteristics assume:

1. output pins
   - have C_L=30pF loads,
   - are configured for fast slew rate (PORTx_PCRn[SRE]=0), and
   - are configured for high drive strength (PORTx_PCRn[DSE]=1)
2. input pins
   - have their passive filter disabled (PORTx_PCRn[PFE]=0)

5.2 Nonswitching electrical specifications

5.2.1 Voltage and current operating requirements

Table 1. Voltage and current operating requirements

Symbol	Description	Min.	Max.	Unit	Notes
V_{DD}	Supply voltage	1.71	3.6	V	
V_{DDA}	Analog supply voltage	1.71	3.6	V	
$V_{DD} – V_{DDA}$	V_{DD}-to-V_{DDA} differential voltage	–0.1	0.1	V	
$V_{SS} – V_{SSA}$	V_{SS}-to-V_{SSA} differential voltage	–0.1	0.1	V	
V_{BAT}	RTC battery supply voltage	1.71	3.6	V	
V_{IH}	Input high voltage • 2.7 V ≤ V_{DD} ≤ 3.6 V • 1.7 V ≤ V_{DD} ≤ 2.7 V	 0.7 × V_{DD} 0.75 × V_{DD}	 — —	 V V	
V_{IL}	Input low voltage • 2.7 V ≤ V_{DD} ≤ 3.6 V • 1.7 V ≤ V_{DD} ≤ 2.7 V	 — —	 0.35 × V_{DD} 0.3 × V_{DD}	 V V	
V_{HYS}	Input hysteresis	0.06 × V_{DD}	—	V	
I_{ICDIO}	Digital pin negative DC injection current — single pin • V_{IN} < V_{SS}-0.3V	-5	—	mA	1
I_{ICAIO}	Analog[2], EXTAL, and XTAL pin DC injection current — single pin • V_{IN} < V_{SS}-0.3V (Negative current injection) • V_{IN} > V_{DD}+0.3V (Positive current injection)	 -5 —	 — +5	mA	3
I_{ICcont}	Contiguous pin DC injection current —regional limit, includes sum of negative injection currents or sum of positive injection currents of 16 contiguous pins • Negative current injection • Positive current injection	 -25 —	 — +25	mA	
V_{RAM}	V_{DD} voltage required to retain RAM	1.2	—	V	
V_{RFVBAT}	V_{BAT} voltage required to retain the VBAT register file	V_{POR_VBAT}	—	V	

1. All 5 V tolerant digital I/O pins are internally clamped to V_{SS} through a ESD protection diode. There is no diode connection to V_{DD}. If V_{IN} greater than V_{DIO_MIN} (=V_{SS}-0.3V) is observed, then there is no need to provide current limiting resistors at the pads. If this limit cannot be observed then a current limiting resistor is required. The negative DC injection current limiting resistor is calculated as $R=(V_{DIO_MIN}-V_{IN})/|I_{IC}|$.
2. Analog pins are defined as pins that do not have an associated general purpose I/O port function.

3. All analog pins are internally clamped to V_{SS} and V_{DD} through ESD protection diodes. If V_{IN} is greater than V_{AIO_MIN} (=V_{SS}-0.3V) and V_{IN} is less than V_{AIO_MAX}(=V_{DD}+0.3V) is observed, then there is no need to provide current limiting resistors at the pads. If these limits cannot be observed then a current limiting resistor is required. The negative DC injection current limiting resistor is calculated as R=(V_{AIO_MIN}-V_{IN})/$|I_{IC}|$. The positive injection current limiting resistor is calcualted as R=(V_{IN}-V_{AIO_MAX})/$|I_{IC}|$. Select the larger of these two calculated resistances.

5.2.2 LVD and POR operating requirements

Table 2. V_{DD} supply LVD and POR operating requirements

Symbol	Description	Min.	Typ.	Max.	Unit	Notes
V_{POR}	Falling VDD POR detect voltage	0.8	1.1	1.5	V	
V_{LVDH}	Falling low-voltage detect threshold — high range (LVDV=01)	2.48	2.56	2.64	V	
	Low-voltage warning thresholds — high range					1
V_{LVW1H}	• Level 1 falling (LVWV=00)	2.62	2.70	2.78	V	
V_{LVW2H}	• Level 2 falling (LVWV=01)	2.72	2.80	2.88	V	
V_{LVW3H}	• Level 3 falling (LVWV=10)	2.82	2.90	2.98	V	
V_{LVW4H}	• Level 4 falling (LVWV=11)	2.92	3.00	3.08	V	
V_{HYSH}	Low-voltage inhibit reset/recover hysteresis — high range	—	±80	—	mV	
V_{LVDL}	Falling low-voltage detect threshold — low range (LVDV=00)	1.54	1.60	1.66	V	
	Low-voltage warning thresholds — low range					1
V_{LVW1L}	• Level 1 falling (LVWV=00)	1.74	1.80	1.86	V	
V_{LVW2L}	• Level 2 falling (LVWV=01)	1.84	1.90	1.96	V	
V_{LVW3L}	• Level 3 falling (LVWV=10)	1.94	2.00	2.06	V	
V_{LVW4L}	• Level 4 falling (LVWV=11)	2.04	2.10	2.16	V	
V_{HYSL}	Low-voltage inhibit reset/recover hysteresis — low range	—	±60	—	mV	
V_{BG}	Bandgap voltage reference	0.97	1.00	1.03	V	
t_{LPO}	Internal low power oscillator period — factory trimmed	900	1000	1100	μs	

1. Rising thresholds are falling threshold + hysteresis voltage

Table 3. VBAT power operating requirements

Symbol	Description	Min.	Typ.	Max.	Unit	Notes
V_{POR_VBAT}	Falling VBAT supply POR detect voltage	0.8	1.1	1.5	V	

5.2.3 Voltage and current operating behaviors

Table 4. Voltage and current operating behaviors

Symbol	Description	Min.	Max.	Unit	Notes
V_{OH}	Output high voltage — high drive strength • 2.7 V ≤ V_{DD} ≤ 3.6 V, I_{OH} = -9mA • 1.71 V ≤ V_{DD} ≤ 2.7 V, I_{OH} = -3mA	 V_{DD} – 0.5 V_{DD} – 0.5	 — —	 V V	
	Output high voltage — low drive strength • 2.7 V ≤ V_{DD} ≤ 3.6 V, I_{OH} = -2mA • 1.71 V ≤ V_{DD} ≤ 2.7 V, I_{OH} = -0.6mA	 V_{DD} – 0.5 V_{DD} – 0.5	 — —	 V V	
I_{OHT}	Output high current total for all ports	—	100	mA	
V_{OL}	Output low voltage — high drive strength • 2.7 V ≤ V_{DD} ≤ 3.6 V, I_{OL} = 9mA • 1.71 V ≤ V_{DD} ≤ 2.7 V, I_{OL} = 3mA	 — —	 0.5 0.5	 V V	
	Output low voltage — low drive strength • 2.7 V ≤ V_{DD} ≤ 3.6 V, I_{OL} = 2mA • 1.71 V ≤ V_{DD} ≤ 2.7 V, I_{OL} = 0.6mA	 — —	 0.5 0.5	 V V	
I_{OLT}	Output low current total for all ports	—	100	mA	
I_{IN}	Input leakage current (per pin) for full temperature range	—	1	μA	1
I_{IN}	Input leakage current (per pin) at 25°C	—	0.025	μA	1
I_{OZ}	Hi-Z (off-state) leakage current (per pin)	—	1	μA	
R_{PU}	Internal pullup resistors	20	50	kΩ	2
R_{PD}	Internal pulldown resistors	20	50	kΩ	3

1. Measured at VDD=3.6V
2. Measured at V_{DD} supply voltage = V_{DD} min and Vinput = V_{SS}
3. Measured at V_{DD} supply voltage = V_{DD} min and Vinput = V_{DD}

5.2.4 Power mode transition operating behaviors

All specifications except t_{POR}, and VLLSx→RUN recovery times in the following table assume this clock configuration:

- CPU and system clocks = 72 MHz
- Bus clock = 36 MHz
- FlexBus clock = 36 MHz
- Flash clock = 24 MHz

Table 5. Power mode transition operating behaviors

Symbol	Description	Min.	Max.	Unit	Notes
t_{POR}	After a POR event, amount of time from the point V_{DD} reaches 1.71 V to execution of the first instruction across the operating temperature range of the chip.	—	300	μs	1
	• VLLS1 → RUN	—	112	μs	
	• VLLS2 → RUN	—	74	μs	
	• VLLS3 → RUN	—	73	μs	
	• LLS → RUN	—	5.9	μs	
	• VLPS → RUN	—	5.8	μs	
	• STOP → RUN	—	4.2	μs	

1. Normal boot (FTFL_OPT[LPBOOT]=1)

5.2.5 Power consumption operating behaviors

Table 6. Power consumption operating behaviors

Symbol	Description	Min.	Typ.	Max.	Unit	Notes
I_{DDA}	Analog supply current	—	—	See note	mA	1
I_{DD_RUN}	Run mode current — all peripheral clocks disabled, code executing from flash					2
	• @ 1.8V	—	21.5	25	mA	
	• @ 3.0V	—	21.5	30	mA	
I_{DD_RUN}	Run mode current — all peripheral clocks enabled, code executing from flash					3, 4
	• @ 1.8V	—	31	34	mA	
	• @ 3.0V					
	• @ 25°C	—	31	34	mA	
	• @ 125°C	—	32	39	mA	
I_{DD_WAIT}	Wait mode high frequency current at 3.0 V — all peripheral clocks disabled	—	12.5	—	mA	2
I_{DD_WAIT}	Wait mode reduced frequency current at 3.0 V — all peripheral clocks disabled	—	7.2	—	mA	5
I_{DD_VLPR}	Very-low-power run mode current at 3.0 V — all peripheral clocks disabled	—	0.996	—	mA	6

Table continues on the next page...

Table 6. Power consumption operating behaviors (continued)

Symbol	Description	Min.	Typ.	Max.	Unit	Notes
I_{DD_VLPR}	Very-low-power run mode current at 3.0 V — all peripheral clocks enabled	—	1.46	—	mA	7
I_{DD_VLPW}	Very-low-power wait mode current at 3.0 V — all peripheral clocks disabled	—	0.61	—	mA	8
I_{DD_STOP}	Stop mode current at 3.0 V					
	• @ –40 to 25°C	—	0.35	0.567	mA	
	• @ 70°C	—	0.384	0.793	mA	
	• @ 105°C	—	0.628	1.2	mA	
I_{DD_VLPS}	Very-low-power stop mode current at 3.0 V					
	• @ –40 to 25°C	—	5.9	32.7	μA	
	• @ 70°C	—	26.1	59.8	μA	
	• @ 105°C	—	98.1	188	μA	
I_{DD_LLS}	Low leakage stop mode current at 3.0 V					9
	• @ –40 to 25°C	—	2.6	8.6	μA	
	• @ 70°C	—	10.3	29.1	μA	
	• @ 105°C	—	42.5	92.5	μA	
I_{DD_VLLS3}	Very low-leakage stop mode 3 current at 3.0 V					9
	• @ –40 to 25°C	—	1.9	5.8	μA	
	• @ 70°C	—	6.9	12.1	μA	
	• @ 105°C	—	28.1	41.9	μA	
I_{DD_VLLS2}	Very low-leakage stop mode 2 current at 3.0 V					
	• @ –40 to 25°C	—	1.59	5.5	μA	
	• @ 70°C	—	4.3	9.5	μA	
	• @ 105°C	—	17.5	34	μA	
I_{DD_VLLS1}	Very low-leakage stop mode 1 current at 3.0 V					
	• @ –40 to 25°C	—	1.47	5.4	μA	
	• @ 70°C	—	2.97	8.1	μA	
	• @ 105°C	—	12.41	32	μA	
I_{DD_VBAT}	Average current with RTC and 32kHz disabled at 3.0 V					
	• @ –40 to 25°C	—	0.19	0.22	μA	
	• @ 70°C	—	0.49	0.64	μA	
	• @ 105°C	—	2.2	3.2	μA	

Table continues on the next page...

Table 6. Power consumption operating behaviors (continued)

Symbol	Description	Min.	Typ.	Max.	Unit	Notes
I_{DD_VBAT}	Average current when CPU is not accessing RTC registers					10
	• @ 1.8V					
	• @ –40 to 25°C	—	0.57	0.67	μA	
	• @ 70°C	—	0.90	1.2	μA	
	• @ 105°C	—	2.4	3.5	μA	
	• @ 3.0V					
	• @ –40 to 25°C	—	0.67	0.94	μA	
	• @ 70°C	—	1.0	1.4	μA	
	• @ 105°C	—	2.7	3.9	μA	

1. The analog supply current is the sum of the active or disabled current for each of the analog modules on the device. See each module's specification for its supply current.
2. 72MHz core and system clock, 36MHz bus and FlexBus clock, and 24MHz flash clock. MCG configured for FEE mode. All peripheral clocks disabled.
3. 72MHz core and system clock, 36MHz bus and FlexBus clock, and 24MHz flash clock. MCG configured for FEE mode. All peripheral clocks enabled.
4. Max values are measured with CPU executing DSP instructions.
5. 25MHz core, system, bus, FlexBus and flash clock. MCG configured for FEI mode.
6. 4 MHz core and system clock, 4 MHz FlexBus and bus clock, and 1 MHz flash clock. MCG configured for BLPE mode. All peripheral clocks disabled. Code executing from flash.
7. 4 MHz core and system clock, 4 MHz FlexBus and bus clock, and 1 MHz flash clock. MCG configured for BLPE mode. All peripheral clocks enabled but peripherals are not in active operation. Code executing from flash.
8. 4 MHz core and system clock, 4 MHz FlexBus and bus clock, and 1 MHz flash clock. MCG configured for BLPE mode. All peripheral clocks disabled.
9. Data reflects devices with 128 KB of RAM. For devices with 64 KB of RAM, power consumption is reduced by 2 μA.
10. Includes 32kHz oscillator current and RTC operation.

5.2.5.1 Diagram: Typical IDD_RUN operating behavior

The following data was measured under these conditions:

- MCG in FBE mode for 50 MHz and lower frequencies. MCG in FEE mode at greater than 50 MHz frequencies.
- USB regulator disabled
- No GPIOs toggled
- Code execution from flash with cache enabled
- For the ALLOFF curve, all peripheral clocks are disabled except FTFL

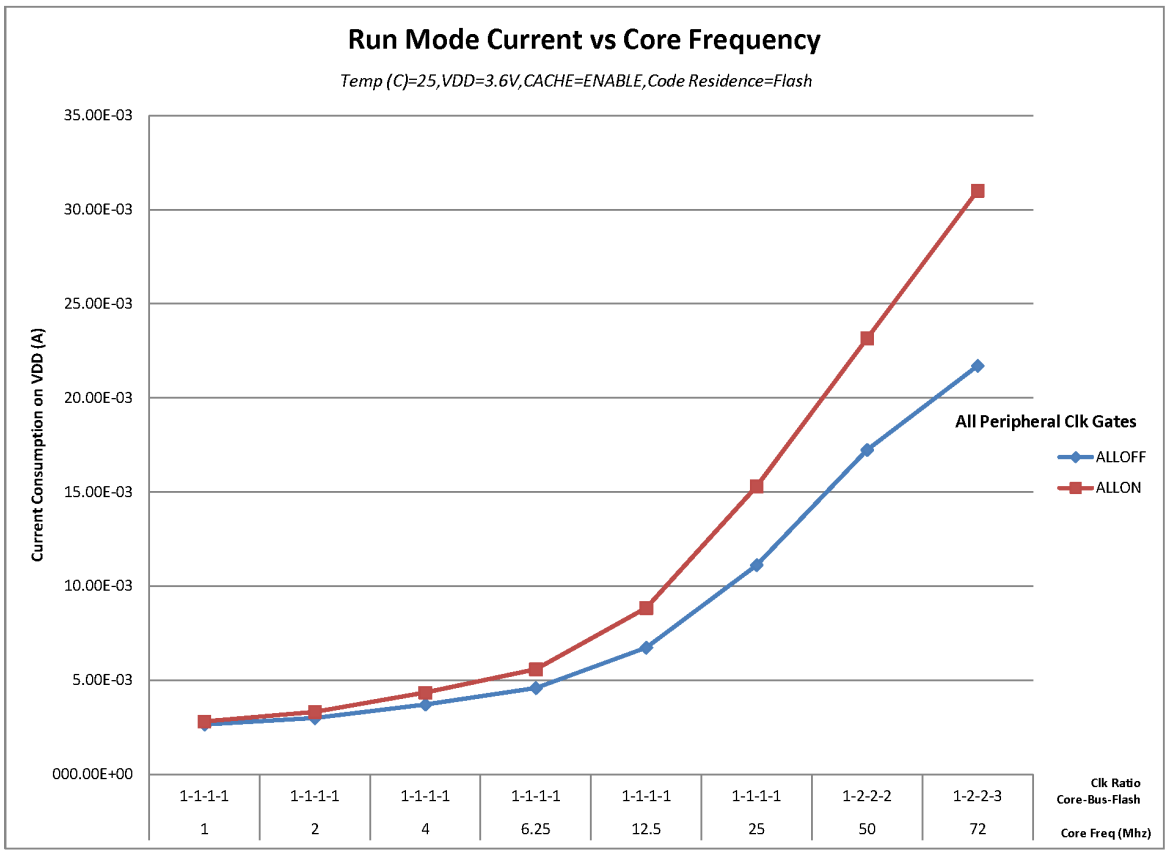

Figure 2. Run mode supply current vs. core frequency

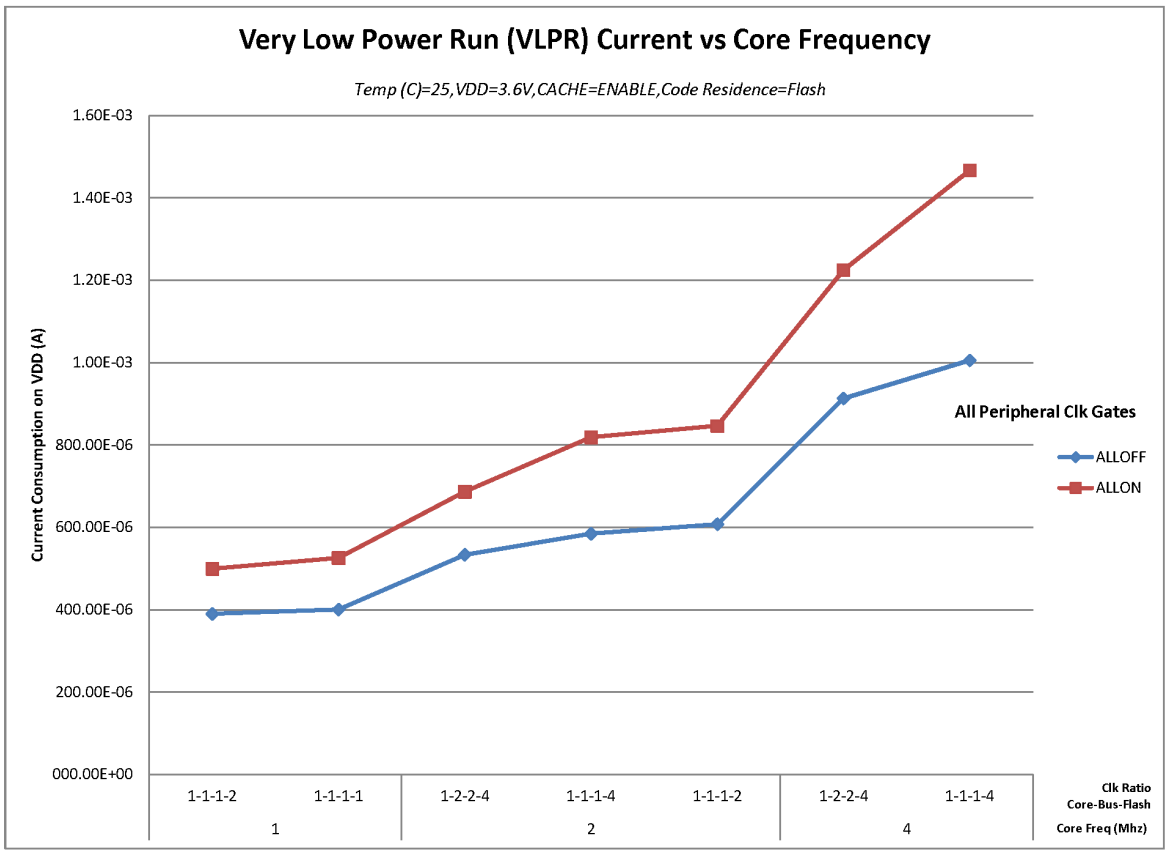

Figure 3. VLPR mode supply current vs. core frequency

5.2.6 Designing with radiated emissions in mind

To find application notes that provide guidance on designing your system to minimize interference from radiated emissions:

1. Go to http://www.freescale.com.
2. Perform a keyword search for “EMC design.”

5.2.7 Capacitance attributes

Table 7. Capacitance attributes

Symbol	Description	Min.	Max.	Unit
C_{IN_A}	Input capacitance: analog pins	—	7	pF

Table continues on the next page...

Table 7. Capacitance attributes (continued)

Symbol	Description	Min.	Max.	Unit
C_{IN_D}	Input capacitance: digital pins	—	7	pF

5.3 Switching specifications

5.3.1 Device clock specifications

Table 8. Device clock specifications

Symbol	Description	Min.	Max.	Unit	Notes
Normal run mode					
f_{SYS}	System and core clock	—	72	MHz	
f_{SYS_USB}	System and core clock when Full Speed USB in operation	20	—	MHz	
f_{BUS}	Bus clock	—	50	MHz	
FB_CLK	FlexBus clock	—	50	MHz	
f_{FLASH}	Flash clock	—	25	MHz	
f_{LPTMR}	LPTMR clock	—	25	MHz	
VLPR mode[1]					
f_{SYS}	System and core clock	—	4	MHz	
f_{BUS}	Bus clock	—	4	MHz	
FB_CLK	FlexBus clock	—	4	MHz	
f_{FLASH}	Flash clock	—	1	MHz	
f_{ERCLK}	External reference clock	—	16	MHz	
f_{LPTMR_pin}	LPTMR clock	—	25	MHz	
f_{LPTMR_ERCLK}	LPTMR external reference clock	—	16	MHz	
$f_{FlexCAN_ERCLK}$	FlexCAN external reference clock	—	8	MHz	
f_{I2S_MCLK}	I2S master clock	—	12.5	MHz	
f_{I2S_BCLK}	I2S bit clock	—	4	MHz	

1. The frequency limitations in VLPR mode here override any frequency specification listed in the timing specification for any other module.

5.3.2 General switching specifications

These general purpose specifications apply to all signals configured for GPIO, UART, CAN, CMT, and I^2C signals.

Table 9. General switching specifications

Symbol	Description	Min.	Max.	Unit	Notes
	GPIO pin interrupt pulse width (digital glitch filter disabled) — Synchronous path	1.5	—	Bus clock cycles	1, 2
	GPIO pin interrupt pulse width (digital glitch filter disabled, analog filter enabled) — Asynchronous path	100	—	ns	3
	GPIO pin interrupt pulse width (digital glitch filter disabled, analog filter disabled) — Asynchronous path	16	—	ns	3
	External reset pulse width (digital glitch filter disabled)	100	—	ns	3
	Mode select ($\overline{EZP_CS}$) hold time after reset deassertion	2	—	Bus clock cycles	
	Port rise and fall time (high drive strength)				4
	• Slew disabled				
	• $1.71 \le V_{DD} \le 2.7V$	—	12	ns	
	• $2.7 \le V_{DD} \le 3.6V$	—		ns	
	• Slew enabled		6		
	• $1.71 \le V_{DD} \le 2.7V$	—		ns	
	• $2.7 \le V_{DD} \le 3.6V$	—	36	ns	
			24		
	Port rise and fall time (low drive strength)				5
	• Slew disabled				
	• $1.71 \le V_{DD} \le 2.7V$	—	12	ns	
	• $2.7 \le V_{DD} \le 3.6V$	—	6	ns	
	• Slew enabled				
	• $1.71 \le V_{DD} \le 2.7V$	—	36	ns	
	• $2.7 \le V_{DD} \le 3.6V$	—	24	ns	

1. This is the minimum pulse width that is guaranteed to pass through the pin synchronization circuitry. Shorter pulses may or may not be recognized. In Stop, VLPS, LLS, and VLLSx modes, the synchronizer is bypassed so shorter pulses can be recognized in that case.
2. The greater synchronous and asynchronous timing must be met.
3. This is the minimum pulse width that is guaranteed to be recognized as a pin interrupt request in Stop, VLPS, LLS, and VLLSx modes.
4. 75pF load
5. 15pF load

5.4 Thermal specifications

5.4.1 Thermal operating requirements

Table 10. Thermal operating requirements

Symbol	Description	Min.	Max.	Unit
T_J	Die junction temperature	–40	125	°C
T_A	Ambient temperature	–40	105	°C

5.4.2 Thermal attributes

Board type	Symbol	Description	81 MAPBGA	80 LQFP	Unit	Notes
Single-layer (1s)	$R_{\theta JA}$	Thermal resistance, junction to ambient (natural convection)	74	51	°C/W	1, 2
Four-layer (2s2p)	$R_{\theta JA}$	Thermal resistance, junction to ambient (natural convection)	42	36	°C/W	1, 3
Single-layer (1s)	$R_{\theta JMA}$	Thermal resistance, junction to ambient (200 ft./ min. air speed)	62	41	°C/W	1,3
Four-layer (2s2p)	$R_{\theta JMA}$	Thermal resistance, junction to ambient (200 ft./ min. air speed)	38	30	°C/W	1,3
—	$R_{\theta JB}$	Thermal resistance, junction to board	23	20	°C/W	4
—	$R_{\theta JC}$	Thermal resistance, junction to case	19	10	°C/W	5
—	Ψ_{JT}	Thermal characterization parameter, junction to package top outside center (natural convection)	4	2	°C/W	6

1. Junction temperature is a function of die size, on-chip power dissipation, package thermal resistance, mounting site (board) temperature, ambient temperature, air flow, power dissipation of other components on the board, and board thermal resistance.

2. Determined according to JEDEC Standard JESD51-2, *Integrated Circuits Thermal Test Method Environmental Conditions—Natural Convection (Still Air)* with the single layer board horizontal. For the LQFP, the board meets the JESD51-3 specification. For the MAPBGA, the board meets the JESD51-9 specification.
3. Determined according to JEDEC Standard JESD51-6, *Integrated Circuits Thermal Test Method Environmental Conditions—Forced Convection (Moving Air)* with the board horizontal. For the LQFP, the board meets the JESD51-7 specification.
4. Determined according to JEDEC Standard JESD51-8, *Integrated Circuit Thermal Test Method Environmental Conditions—Junction-to-Board*. Board temperature is measured on the top surface of the board near the package.
5. Determined according to Method 1012.1 of MIL-STD 883, *Test Method Standard, Microcircuits*, with the cold plate temperature used for the case temperature. The value includes the thermal resistance of the interface material between the top of the package and the cold plate.
6. Determined according to JEDEC Standard JESD51-2, *Integrated Circuits Thermal Test Method Environmental Conditions—Natural Convection (Still Air)*.

6 Peripheral operating requirements and behaviors

6.1 Core modules

6.1.1 Debug trace timing specifications

Table 11. Debug trace operating behaviors

Symbol	Description	Min.	Max.	Unit
T_{cyc}	Clock period	Frequency dependent		MHz
T_{wl}	Low pulse width	2	—	ns
T_{wh}	High pulse width	2	—	ns
T_r	Clock and data rise time	—	3	ns
T_f	Clock and data fall time	—	3	ns
T_s	Data setup	3	—	ns
T_h	Data hold	2	—	ns

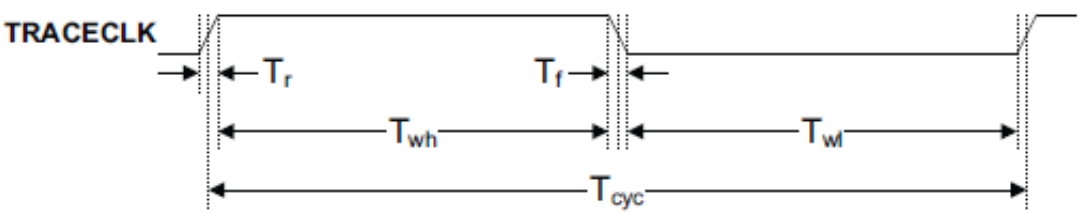

Figure 4. TRACE_CLKOUT specifications

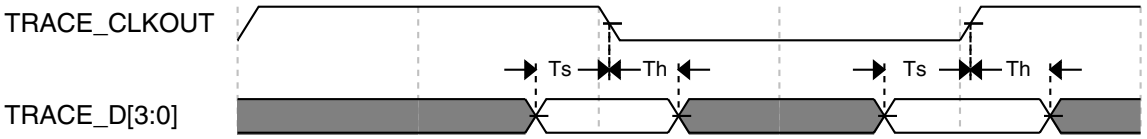

Figure 5. Trace data specifications

6.1.2 JTAG electricals

Table 12. JTAG voltage range electricals

Symbol	Description	Min.	Max.	Unit
	Operating voltage	2.7	5.5	V
J1	TCLK frequency of operation • JTAG • CJTAG	 — —	 10 5	MHz
J2	TCLK cycle period	1/J1	—	ns
J3	TCLK clock pulse width • JTAG • CJTAG	 100 200	 — —	 ns ns ns
J4	TCLK rise and fall times	—	1	ns
J5	TMS input data setup time to TCLK rise • JTAG • CJTAG	 53 112	 — —	ns
J6	TDI input data setup time to TCLK rise	8	—	ns
J7	TMS input data hold time after TCLK rise • JTAG • CJTAG	 3.4 3.4	 — —	ns
J8	TDI input data hold time after TCLK rise	3.4	—	ns
J9	TCLK low to TMS data valid • JTAG • CJTAG	 — —	 48 85	ns
J10	TCLK low to TDO data valid	—	48	ns
J11	Output data hold/invalid time after clock edge[1]	—	3	ns

1. They are common for JTAG and CJTAG. Input transition = 1 ns and Output load = 50pf

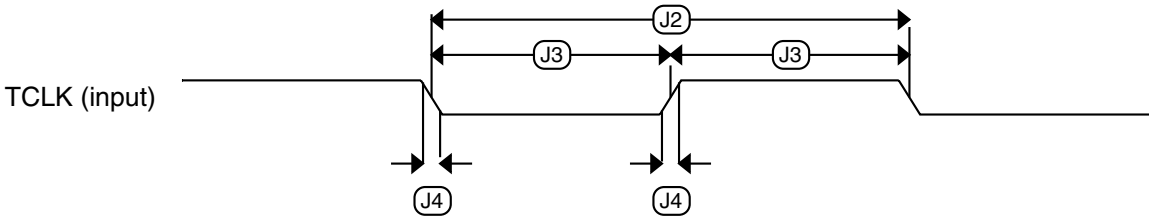

Figure 6. Test clock input timing

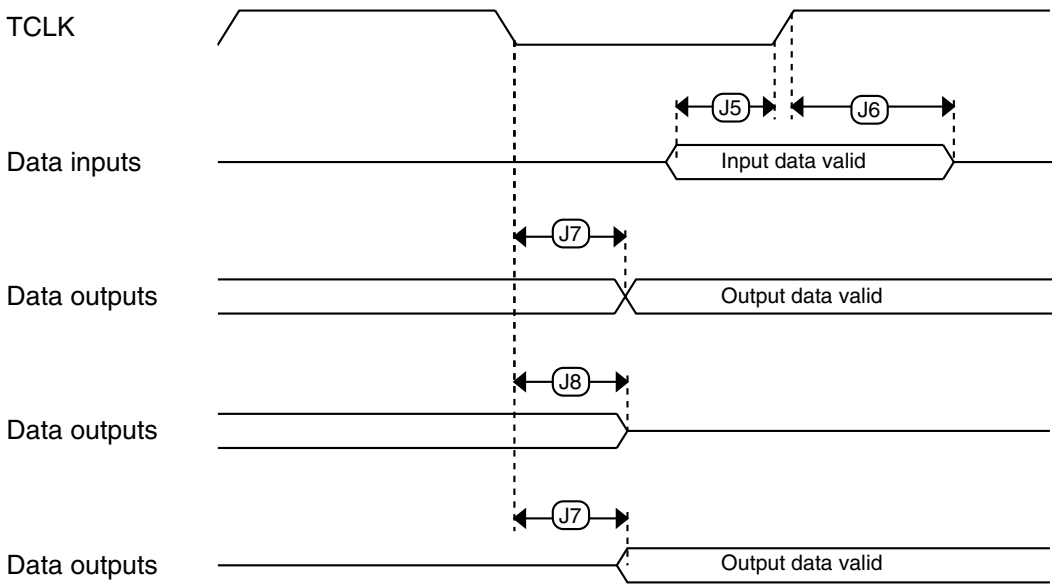

Figure 7. Boundary scan (JTAG) timing

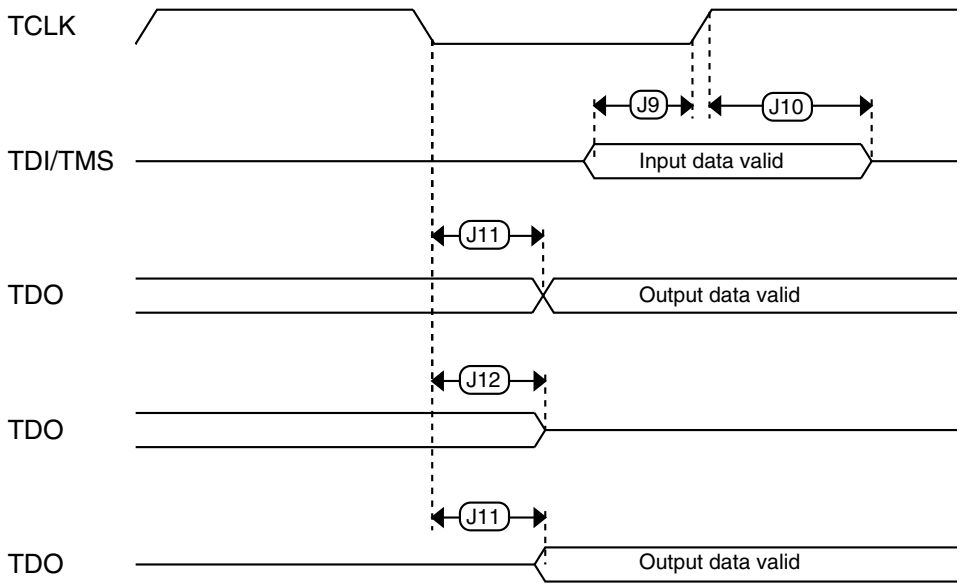

Figure 8. Test Access Port timing

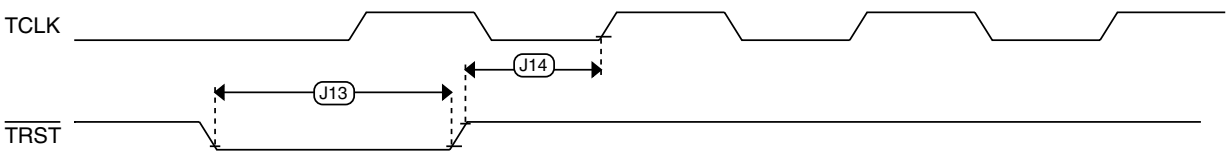

Figure 9. $\overline{\text{TRST}}$ timing

6.2 System modules

There are no specifications necessary for the device's system modules.

6.3 Clock modules

6.3.1 MCG specifications

Table 13. MCG specifications

Symbol	Description		Min.	Typ.	Max.	Unit	Notes
f_{ints_ft}	Internal reference frequency (slow clock) — factory trimmed at nominal VDD and 25 °C		—	32.768	—	kHz	
f_{ints_t}	Internal reference frequency (slow clock) — user trimmed		31.25	—	39.0625	kHz	
$\Delta_{fdco_res_t}$	Resolution of trimmed average DCO output frequency at fixed voltage and temperature — using SCTRIM and SCFTRIM		—	± 0.3	± 0.6	$\%f_{dco}$	1
$\Delta f_{dco_res_t}$	Resolution of trimmed average DCO output frequency at fixed voltage and temperature — using SCTRIM only		—	± 0.2	± 0.5	$\%f_{dco}$	1
Δf_{dco_t}	Total deviation of trimmed average DCO output frequency over voltage and temperature		—	+0.5/-0.7	—	$\%f_{dco}$	1
Δf_{dco_t}	Total deviation of trimmed average DCO output frequency over fixed voltage and temperature range of 0–70°C		—			$\%f_{dco}$	1
f_{intf_ft}	Internal reference frequency (fast clock) — factory trimmed at nominal VDD and 25°C		—	4	—	MHz	
f_{intf_t}	Internal reference frequency (fast clock) — user trimmed at nominal VDD and 25 °C		3	—	5	MHz	
f_{loc_low}	Loss of external clock minimum frequency — RANGE = 00		(3/5) x f_{ints_t}	—	—	kHz	
f_{loc_high}	Loss of external clock minimum frequency — RANGE = 01, 10, or 11		(16/5) x f_{ints_t}	—	—	kHz	
FLL							
f_{fll_ref}	FLL reference frequency range		31.25	—	39.0625	kHz	
f_{dco}	DCO output frequency range	Low range (DRS=00) $640 \times f_{fll_ref}$	20	20.97	25	MHz	2, 3
		Mid range (DRS=01) $1280 \times f_{fll_ref}$	40	41.94	50	MHz	
		Mid-high range (DRS=10) $1920 \times f_{fll_ref}$	60	62.91	75	MHz	
		High range (DRS=11) $2560 \times f_{fll_ref}$	80	83.89	100	MHz	

Table continues on the next page...

Table 13. MCG specifications (continued)

Symbol	Description		Min.	Typ.	Max.	Unit	Notes
$f_{dco_t_DMX32}$	DCO output frequency	Low range (DRS=00) $732 \times f_{fll_ref}$	—	23.99	—	MHz	4, 5
		Mid range (DRS=01) $1464 \times f_{fll_ref}$	—	47.97	—	MHz	
		Mid-high range (DRS=10) $2197 \times f_{fll_ref}$	—	71.99	—	MHz	
		High range (DRS=11) $2929 \times f_{fll_ref}$	—	95.98	—	MHz	
J_{cyc_fll}	FLL period jitter • f_{VCO} = 48 MHz • f_{VCO} = 98 MHz		— —	180 150	— —	ps	
$t_{fll_acquire}$	FLL target frequency acquisition time		—	—	1	ms	6
PLL							
f_{vco}	VCO operating frequency		48.0	—	100	MHz	
I_{pll}	PLL operating current • PLL @ 96 MHz ($f_{osc_hi_1}$ = 8 MHz, f_{pll_ref} = 2 MHz, VDIV multiplier = 48)		—	1060	—	μA	7
I_{pll}	PLL operating current • PLL @ 48 MHz ($f_{osc_hi_1}$ = 8 MHz, f_{pll_ref} = 2 MHz, VDIV multiplier = 24)		—	600	—	μA	7
f_{pll_ref}	PLL reference frequency range		2.0	—	4.0	MHz	
J_{cyc_pll}	PLL period jitter (RMS) • f_{vco} = 48 MHz • f_{vco} = 100 MHz		— —	120 50	— —	ps ps	8
J_{acc_pll}	PLL accumulated jitter over 1μs (RMS) • f_{vco} = 48 MHz • f_{vco} = 100 MHz		— —	1350 600	— —	ps ps	8
D_{lock}	Lock entry frequency tolerance		± 1.49	—	± 2.98	%	
D_{unl}	Lock exit frequency tolerance		± 4.47	—	± 5.97	%	
t_{pll_lock}	Lock detector detection time		—	—	$150 \times 10^{-6} + 1075(1/f_{pll_ref})$	s	9

1. This parameter is measured with the internal reference (slow clock) being used as a reference to the FLL (FEI clock mode).
2. These typical values listed are with the slow internal reference clock (FEI) using factory trim and DMX32=0.
3. The resulting system clock frequencies should not exceed their maximum specified values. The DCO frequency deviation (Δf_{dco_t}) over voltage and temperature should be considered.
4. These typical values listed are with the slow internal reference clock (FEI) using factory trim and DMX32=1.
5. The resulting clock frequency must not exceed the maximum specified clock frequency of the device.

6. This specification applies to any time the FLL reference source or reference divider is changed, trim value is changed, DMX32 bit is changed, DRS bits are changed, or changing from FLL disabled (BLPE, BLPI) to FLL enabled (FEI, FEE, FBE, FBI). If a crystal/resonator is being used as the reference, this specification assumes it is already running.
7. Excludes any oscillator currents that are also consuming power while PLL is in operation.
8. This specification was obtained using a Freescale developed PCB. PLL jitter is dependent on the noise characteristics of each PCB and results will vary.
9. This specification applies to any time the PLL VCO divider or reference divider is changed, or changing from PLL disabled (BLPE, BLPI) to PLL enabled (PBE, PEE). If a crystal/resonator is being used as the reference, this specification assumes it is already running.

6.3.2 Oscillator electrical specifications

This section provides the electrical characteristics of the module.

6.3.2.1 Oscillator DC electrical specifications

Table 14. Oscillator DC electrical specifications

Symbol	Description	Min.	Typ.	Max.	Unit	Notes
V_{DD}	Supply voltage	1.71	—	3.6	V	
I_{DDOSC}	Supply current — low-power mode (HGO=0)					1
	• 32 kHz	—	500	—	nA	
	• 4 MHz	—	200	—	μA	
	• 8 MHz (RANGE=01)	—	300	—	μA	
	• 16 MHz	—	950	—	μA	
	• 24 MHz	—	1.2	—	mA	
	• 32 MHz	—	1.5	—	mA	
I_{DDOSC}	Supply current — high gain mode (HGO=1)					1
	• 32 kHz	—	25	—	μA	
	• 4 MHz	—	400	—	μA	
	• 8 MHz (RANGE=01)	—	500	—	μA	
	• 16 MHz	—	2.5	—	mA	
	• 24 MHz	—	3	—	mA	
	• 32 MHz	—	4	—	mA	
C_x	EXTAL load capacitance	—	—	—		2, 3
C_y	XTAL load capacitance	—	—	—		2, 3

Table continues on the next page...

Table 14. Oscillator DC electrical specifications (continued)

Symbol	Description	Min.	Typ.	Max.	Unit	Notes
R_F	Feedback resistor — low-frequency, low-power mode (HGO=0)	—	—	—	MΩ	2, 4
	Feedback resistor — low-frequency, high-gain mode (HGO=1)	—	10	—	MΩ	
	Feedback resistor — high-frequency, low-power mode (HGO=0)	—	—	—	MΩ	
	Feedback resistor — high-frequency, high-gain mode (HGO=1)	—	1	—	MΩ	
R_S	Series resistor — low-frequency, low-power mode (HGO=0)	—	—	—	kΩ	
	Series resistor — low-frequency, high-gain mode (HGO=1)	—	200	—	kΩ	
	Series resistor — high-frequency, low-power mode (HGO=0)	—	—	—	kΩ	
	Series resistor — high-frequency, high-gain mode (HGO=1)	—	0	—	kΩ	
V_{pp}[5]	Peak-to-peak amplitude of oscillation (oscillator mode) — low-frequency, low-power mode (HGO=0)	—	0.6	—	V	
	Peak-to-peak amplitude of oscillation (oscillator mode) — low-frequency, high-gain mode (HGO=1)	—	V_{DD}	—	V	
	Peak-to-peak amplitude of oscillation (oscillator mode) — high-frequency, low-power mode (HGO=0)	—	0.6	—	V	
	Peak-to-peak amplitude of oscillation (oscillator mode) — high-frequency, high-gain mode (HGO=1)	—	V_{DD}	—	V	

1. V_{DD}=3.3 V, Temperature =25 °C
2. See crystal or resonator manufacturer's recommendation
3. C_x,C_y can be provided by using either the integrated capacitors or by using external components.
4. When low power mode is selected, R_F is integrated and must not be attached externally.
5. The EXTAL and XTAL pins should only be connected to required oscillator components and must not be connected to any other devices.

6.3.2.2 Oscillator frequency specifications

Table 15. Oscillator frequency specifications

Symbol	Description	Min.	Typ.	Max.	Unit	Notes
f_{osc_lo}	Oscillator crystal or resonator frequency — low frequency mode (MCG_C2[RANGE]=00)	32	—	40	kHz	

Table continues on the next page...

Table 15. Oscillator frequency specifications (continued)

Symbol	Description	Min.	Typ.	Max.	Unit	Notes
$f_{osc_hi_1}$	Oscillator crystal or resonator frequency — high frequency mode (low range) (MCG_C2[RANGE]=01)	3	—	8	MHz	
$f_{osc_hi_2}$	Oscillator crystal or resonator frequency — high frequency mode (high range) (MCG_C2[RANGE]=1x)	8	—	32	MHz	
f_{ec_extal}	Input clock frequency (external clock mode)	—	—	50	MHz	1, 2
t_{dc_extal}	Input clock duty cycle (external clock mode)	40	50	60	%	
t_{cst}	Crystal startup time — 32 kHz low-frequency, low-power mode (HGO=0)	—	750	—	ms	3, 4
	Crystal startup time — 32 kHz low-frequency, high-gain mode (HGO=1)	—	250	—	ms	
	Crystal startup time — 8 MHz high-frequency (MCG_C2[RANGE]=01), low-power mode (HGO=0)	—	0.6	—	ms	
	Crystal startup time — 8 MHz high-frequency (MCG_C2[RANGE]=01), high-gain mode (HGO=1)	—	1	—	ms	

1. Other frequency limits may apply when external clock is being used as a reference for the FLL or PLL.
2. When transitioning from FBE to FEI mode, restrict the frequency of the input clock so that, when it is divided by FRDIV, it remains within the limits of the DCO input clock frequency.
3. Proper PC board layout procedures must be followed to achieve specifications.
4. Crystal startup time is defined as the time between the oscillator being enabled and the OSCINIT bit in the MCG_S register being set.

6.3.3 32kHz Oscillator Electrical Characteristics

This section describes the module electrical characteristics.

6.3.3.1 32kHz oscillator DC electrical specifications

Table 16. 32kHz oscillator DC electrical specifications

Symbol	Description	Min.	Typ.	Max.	Unit
V_{BAT}	Supply voltage	1.71	—	3.6	V
R_F	Internal feedback resistor	—	100	—	MΩ
C_{para}	Parasitical capacitance of EXTAL32 and XTAL32	—	5	7	pF
V_{pp}[1]	Peak-to-peak amplitude of oscillation	—	0.6	—	V

1. The EXTAL32 and XTAL32 pins should only be connected to required oscillator components and must not be connected to any other devices.

6.3.3.2 32kHz oscillator frequency specifications

Table 17. 32kHz oscillator frequency specifications

Symbol	Description	Min.	Typ.	Max.	Unit	Notes
f_{osc_lo}	Oscillator crystal	—	32.768	—	kHz	
t_{start}	Crystal start-up time	—	1000	—	ms	1

1. Proper PC board layout procedures must be followed to achieve specifications.

6.4 Memories and memory interfaces

6.4.1 Flash electrical specifications

This section describes the electrical characteristics of the flash memory module.

6.4.1.1 Flash timing specifications — program and erase

The following specifications represent the amount of time the internal charge pumps are active and do not include command overhead.

Table 18. NVM program/erase timing specifications

Symbol	Description	Min.	Typ.	Max.	Unit	Notes
t_{hvpgm4}	Longword Program high-voltage time	—	7.5	18	μs	
$t_{hversscr}$	Sector Erase high-voltage time	—	13	113	ms	1
$t_{hversblk32k}$	Erase Block high-voltage time for 32 KB	—	52	452	ms	1
$t_{hversblk256k}$	Erase Block high-voltage time for 256 KB	—	104	904	ms	1

1. Maximum time based on expectations at cycling end-of-life.

6.4.1.2 Flash timing specifications — commands

Table 19. Flash command timing specifications

Symbol	Description	Min.	Typ.	Max.	Unit	Notes
	Read 1s Block execution time					
$t_{rd1blk32k}$	• 32 KB data flash	—	—	0.5	ms	
$t_{rd1blk256k}$	• 256 KB program flash	—	—	1.7	ms	
$t_{rd1sec1k}$	Read 1s Section execution time (data flash sector)	—	—	60	μs	1
$t_{rd1sec2k}$	Read 1s Section execution time (program flash sector)	—	—	60	μs	1

Table continues on the next page...

Table 19. Flash command timing specifications (continued)

Symbol	Description	Min.	Typ.	Max.	Unit	Notes
t_{pgmchk}	Program Check execution time	—	—	45	μs	1
t_{rdrsrc}	Read Resource execution time	—	—	30	μs	1
t_{pgm4}	Program Longword execution time	—	65	145	μs	
	Erase Flash Block execution time					2
$t_{ersblk32k}$	• 32 KB data flash	—	55	465	ms	
$t_{ersblk256k}$	• 256 KB program flash	—	122	985	ms	
t_{ersscr}	Erase Flash Sector execution time	—	14	114	ms	2
	Program Section execution time					
$t_{pgmsec512p}$	• 512 B program flash	—	2.4	—	ms	
$t_{pgmsec512d}$	• 512 B data flash	—	4.7	—	ms	
$t_{pgmsec1kp}$	• 1 KB program flash	—	4.7	—	ms	
$t_{pgmsec1kd}$	• 1 KB data flash	—	9.3	—	ms	
t_{rd1all}	Read 1s All Blocks execution time	—	—	1.8	ms	
t_{rdonce}	Read Once execution time	—	—	25	μs	1
$t_{pgmonce}$	Program Once execution time	—	65	—	μs	
t_{ersall}	Erase All Blocks execution time	—	175	1500	ms	2
t_{vfykey}	Verify Backdoor Access Key execution time	—	—	30	μs	1
	Swap Control execution time					
$t_{swapx01}$	• control code 0x01	—	200	—	μs	
$t_{swapx02}$	• control code 0x02	—	70	150	μs	
$t_{swapx04}$	• control code 0x04	—	70	150	μs	
$t_{swapx08}$	• control code 0x08	—	—	30	μs	
	Program Partition for EEPROM execution time					
$t_{pgmpart32k}$	• 32 KB FlexNVM	—	70	—	ms	
	Set FlexRAM Function execution time:					
$t_{setramff}$	• Control Code 0xFF	—	50	—	μs	
$t_{setram8k}$	• 8 KB EEPROM backup	—	0.3	0.5	ms	
$t_{setram32k}$	• 32 KB EEPROM backup	—	0.7	1.0	ms	
Byte-write to FlexRAM for EEPROM operation						
$t_{eewr8bers}$	Byte-write to erased FlexRAM location execution time	—	175	260	μs	3

Table continues on the next page...

Table 19. Flash command timing specifications (continued)

Symbol	Description	Min.	Typ.	Max.	Unit	Notes
	Byte-write to FlexRAM execution time:					
$t_{eewr8b8k}$	• 8 KB EEPROM backup	—	340	1700	μs	
$t_{eewr8b16k}$	• 16 KB EEPROM backup	—	385	1800	μs	
$t_{eewr8b32k}$	• 32 KB EEPROM backup	—	475	2000	μs	
Word-write to FlexRAM for EEPROM operation						
$t_{eewr16bers}$	Word-write to erased FlexRAM location execution time	—	175	260	μs	
	Word-write to FlexRAM execution time:					
$t_{eewr16b8k}$	• 8 KB EEPROM backup	—	340	1700	μs	
$t_{eewr16b16k}$	• 16 KB EEPROM backup	—	385	1800	μs	
$t_{eewr16b32k}$	• 32 KB EEPROM backup	—	475	2000	μs	
Longword-write to FlexRAM for EEPROM operation						
$t_{eewr32bers}$	Longword-write to erased FlexRAM location execution time	—	360	540	μs	
	Longword-write to FlexRAM execution time:					
$t_{eewr32b8k}$	• 8 KB EEPROM backup	—	545	1950	μs	
$t_{eewr32b16k}$	• 16 KB EEPROM backup	—	630	2050	μs	
$t_{eewr32b32k}$	• 32 KB EEPROM backup	—	810	2250	μs	

1. Assumes 25MHz flash clock frequency.
2. Maximum times for erase parameters based on expectations at cycling end-of-life.
3. For byte-writes to an erased FlexRAM location, the aligned word containing the byte must be erased.

6.4.1.3 Flash current and power specfications

Table 20. Flash current and power specfications

Symbol	Description	Typ.	Unit
I_{DD_PGM}	Worst case programming current in program flash	10	mA

6.4.1.4 Reliability specifications

Table 21. NVM reliability specifications

Symbol	Description	Min.	Typ.[1]	Max.	Unit	Notes
Program Flash						
$t_{nvmretp10k}$	Data retention after up to 10 K cycles	5	50	—	years	
$t_{nvmretp1k}$	Data retention after up to 1 K cycles	20	100	—	years	
$n_{nvmcycp}$	Cycling endurance	10 K	50 K	—	cycles	2

Table continues on the next page...

Table 21. NVM reliability specifications (continued)

Symbol	Description	Min.	Typ.[1]	Max.	Unit	Notes
	Data Flash					
$t_{nvmretd10k}$	Data retention after up to 10 K cycles	5	50	—	years	
$t_{nvmretd1k}$	Data retention after up to 1 K cycles	20	100	—	years	
$n_{nvmcycd}$	Cycling endurance	10 K	50 K	—	cycles	2
	FlexRAM as EEPROM					
$t_{nvmretee100}$	Data retention up to 100% of write endurance	5	50	—	years	
$t_{nvmretee10}$	Data retention up to 10% of write endurance	20	100	—	years	
	Write endurance					3
$n_{nvmwree16}$	• EEPROM backup to FlexRAM ratio = 16	35 K	175 K	—	writes	
$n_{nvmwree128}$	• EEPROM backup to FlexRAM ratio = 128	315 K	1.6 M	—	writes	
$n_{nvmwree512}$	• EEPROM backup to FlexRAM ratio = 512	1.27 M	6.4 M	—	writes	
$n_{nvmwree4k}$	• EEPROM backup to FlexRAM ratio = 4096	10 M	50 M	—	writes	
$n_{nvmwree8k}$	• EEPROM backup to FlexRAM ratio = 8192	20 M	100 M	—	writes	

1. Typical data retention values are based on measured response accelerated at high temperature and derated to a constant 25°C use profile. Engineering Bulletin EB618 does not apply to this technology. Typical endurance defined in Engineering Bulletin EB619.
2. Cycling endurance represents number of program/erase cycles at -40°C ≤ T_j ≤ 125°C.
3. Write endurance represents the number of writes to each FlexRAM location at -40°C ≤Tj ≤ 125°C influenced by the cycling endurance of the FlexNVM (same value as data flash) and the allocated EEPROM backup per subsystem. Minimum and typical values assume all byte-writes to FlexRAM.

6.4.1.5 Write endurance to FlexRAM for EEPROM

When the FlexNVM partition code is not set to full data flash, the EEPROM data set size can be set to any of several non-zero values.

The bytes not assigned to data flash via the FlexNVM partition code are used by the FTFL to obtain an effective endurance increase for the EEPROM data. The built-in EEPROM record management system raises the number of program/erase cycles that can be attained prior to device wear-out by cycling the EEPROM data through a larger EEPROM NVM storage space.

While different partitions of the FlexNVM are available, the intention is that a single choice for the FlexNVM partition code and EEPROM data set size is used throughout the entire lifetime of a given application. The EEPROM endurance equation and graph shown below assume that only one configuration is ever used.

$$\text{Writes_subsystem} = \frac{\text{EEPROM} - 2 \times \text{EEESPLIT} \times \text{EEESIZE}}{\text{EEESPLIT} \times \text{EEESIZE}} \times \text{Write_efficiency} \times n_{nvmcycd}$$

where

- Writes_subsystem — minimum number of writes to each FlexRAM location for subsystem (each subsystem can have different endurance)
- EEPROM — allocated FlexNVM for each EEPROM subsystem based on DEPART; entered with Program Partition command
- EEESPLIT — FlexRAM split factor for subsystem; entered with the Program Partition command
- EEESIZE — allocated FlexRAM based on DEPART; entered with Program Partition command
- Write_efficiency —
  - 0.25 for 8-bit writes to FlexRAM
  - 0.50 for 16-bit or 32-bit writes to FlexRAM
- $n_{nvmcycd}$ — data flash cycling endurance

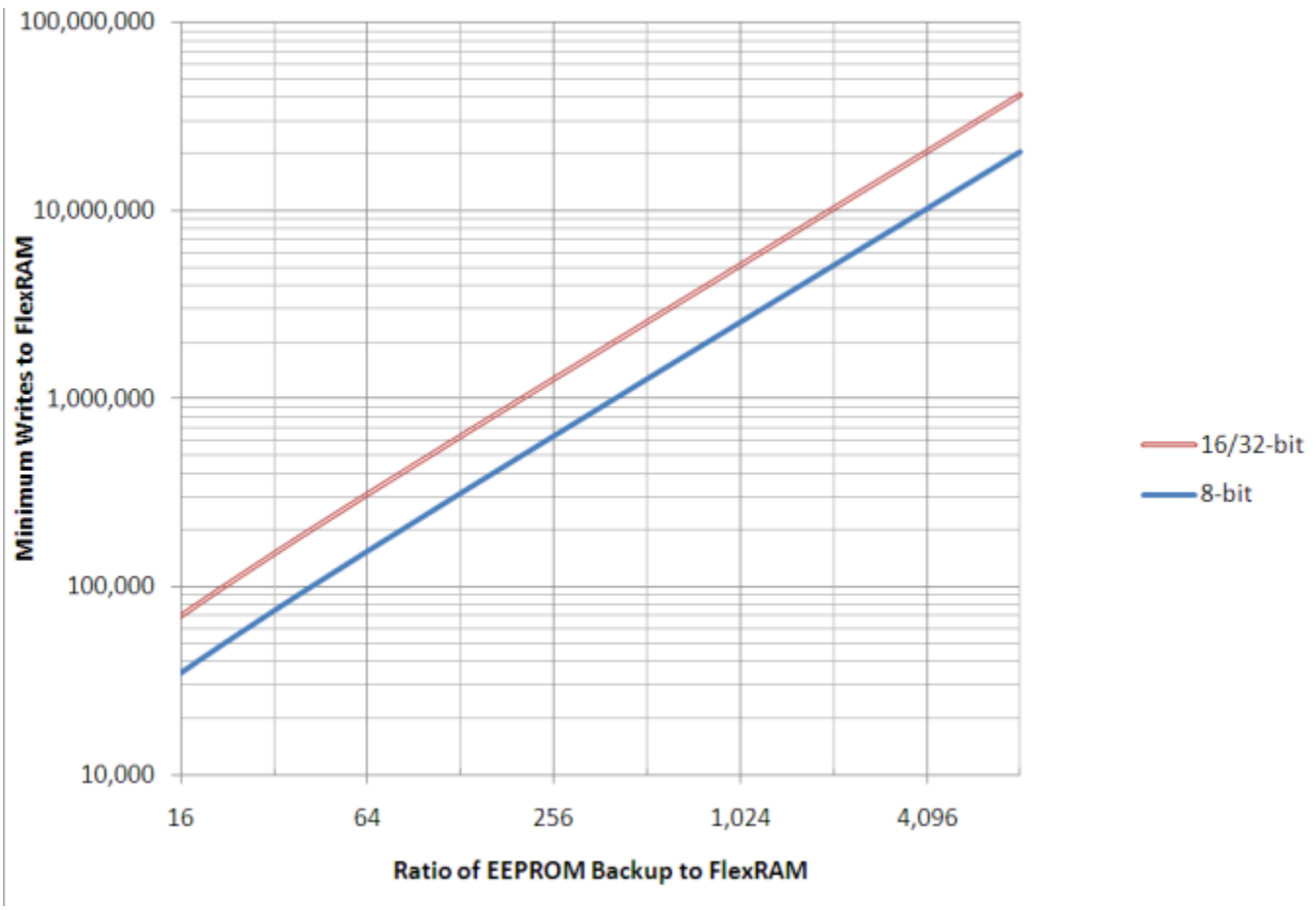

Figure 10. EEPROM backup writes to FlexRAM

6.4.2 EzPort Switching Specifications

Table 22. EzPort switching specifications

Num	Description	Min.	Max.	Unit
	Operating voltage	1.71	3.6	V
EP1	EZP_CK frequency of operation (all commands except READ)	—	$f_{SYS}/2$	MHz
EP1a	EZP_CK frequency of operation (READ command)	—	$f_{SYS}/8$	MHz
EP2	$\overline{EZP_CS}$ negation to next $\overline{EZP_CS}$ assertion	2 x t_{EZP_CK}	—	ns
EP3	$\overline{EZP_CS}$ input valid to EZP_CK high (setup)	5	—	ns
EP4	EZP_CK high to $\overline{EZP_CS}$ input invalid (hold)	5	—	ns
EP5	EZP_D input valid to EZP_CK high (setup)	2	—	ns
EP6	EZP_CK high to EZP_D input invalid (hold)	5	—	ns
EP7	EZP_CK low to EZP_Q output valid	—	16	ns
EP8	EZP_CK low to EZP_Q output invalid (hold)	0	—	ns
EP9	$\overline{EZP_CS}$ negation to EZP_Q tri-state	—	12	ns

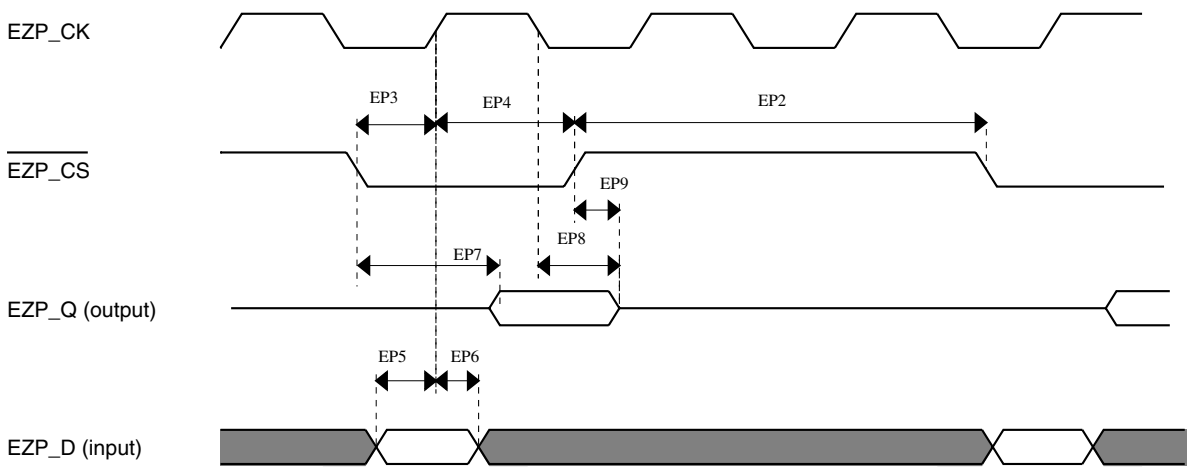

Figure 11. EzPort Timing Diagram

6.4.3 Flexbus Switching Specifications

All processor bus timings are synchronous; input setup/hold and output delay are given in respect to the rising edge of a reference clock, FB_CLK. The FB_CLK frequency may be the same as the internal system bus frequency or an integer divider of that frequency.

The following timing numbers indicate when data is latched or driven onto the external bus, relative to the Flexbus output clock (FB_CLK). All other timing relationships can be derived from these values.

Table 23. Flexbus limited voltage range switching specifications

Num	Description	Min.	Max.	Unit	Notes
	Operating voltage	2.7	3.6	V	
	Frequency of operation	—	FB_CLK	MHz	
FB1	Clock period	20	—	ns	
FB2	Address, data, and control output valid	—	11.5	ns	1
FB3	Address, data, and control output hold	0.5	—	ns	1
FB4	Data and $\overline{\text{FB_TA}}$ input setup	8.5	—	ns	2
FB5	Data and $\overline{\text{FB_TA}}$ input hold	0.5	—	ns	2

1. Specification is valid for all FB_AD[31:0], $\overline{\text{FB_BE/BWE}n}$, $\overline{\text{FB_CS}n}$, $\overline{\text{FB_OE}}$, FB_R/$\overline{\text{W}}$,$\overline{\text{FB_TBST}}$, FB_TSIZ[1:0], FB_ALE, and $\overline{\text{FB_TS}}$.
2. Specification is valid for all FB_AD[31:0] and $\overline{\text{FB_TA}}$.

Table 24. Flexbus full voltage range switching specifications

Num	Description	Min.	Max.	Unit	Notes
	Operating voltage	1.71	3.6	V	
	Frequency of operation	—	FB_CLK	MHz	
FB1	Clock period	1/FB_CLK	—	ns	
FB2	Address, data, and control output valid	—	13.5	ns	1
FB3	Address, data, and control output hold	0	—	ns	1
FB4	Data and $\overline{\text{FB_TA}}$ input setup	13.7	—	ns	2
FB5	Data and $\overline{\text{FB_TA}}$ input hold	0.5	—	ns	2

1. Specification is valid for all FB_AD[31:0], $\overline{\text{FB_BE/BWE}n}$, $\overline{\text{FB_CS}n}$, $\overline{\text{FB_OE}}$, FB_R/$\overline{\text{W}}$,$\overline{\text{FB_TBST}}$, FB_TSIZ[1:0], FB_ALE, and $\overline{\text{FB_TS}}$.
2. Specification is valid for all FB_AD[31:0] and $\overline{\text{FB_TA}}$.

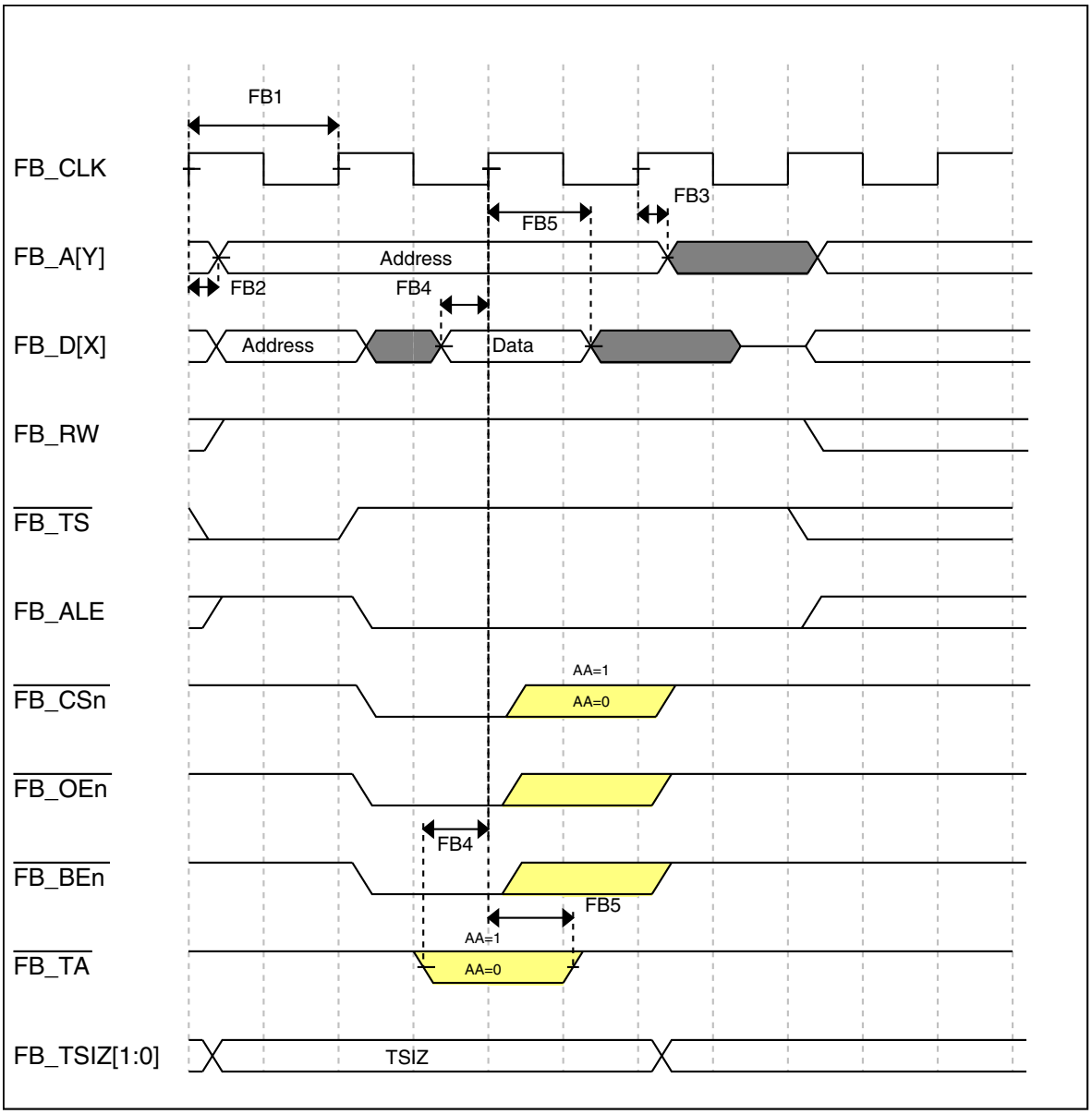

Figure 12. FlexBus read timing diagram

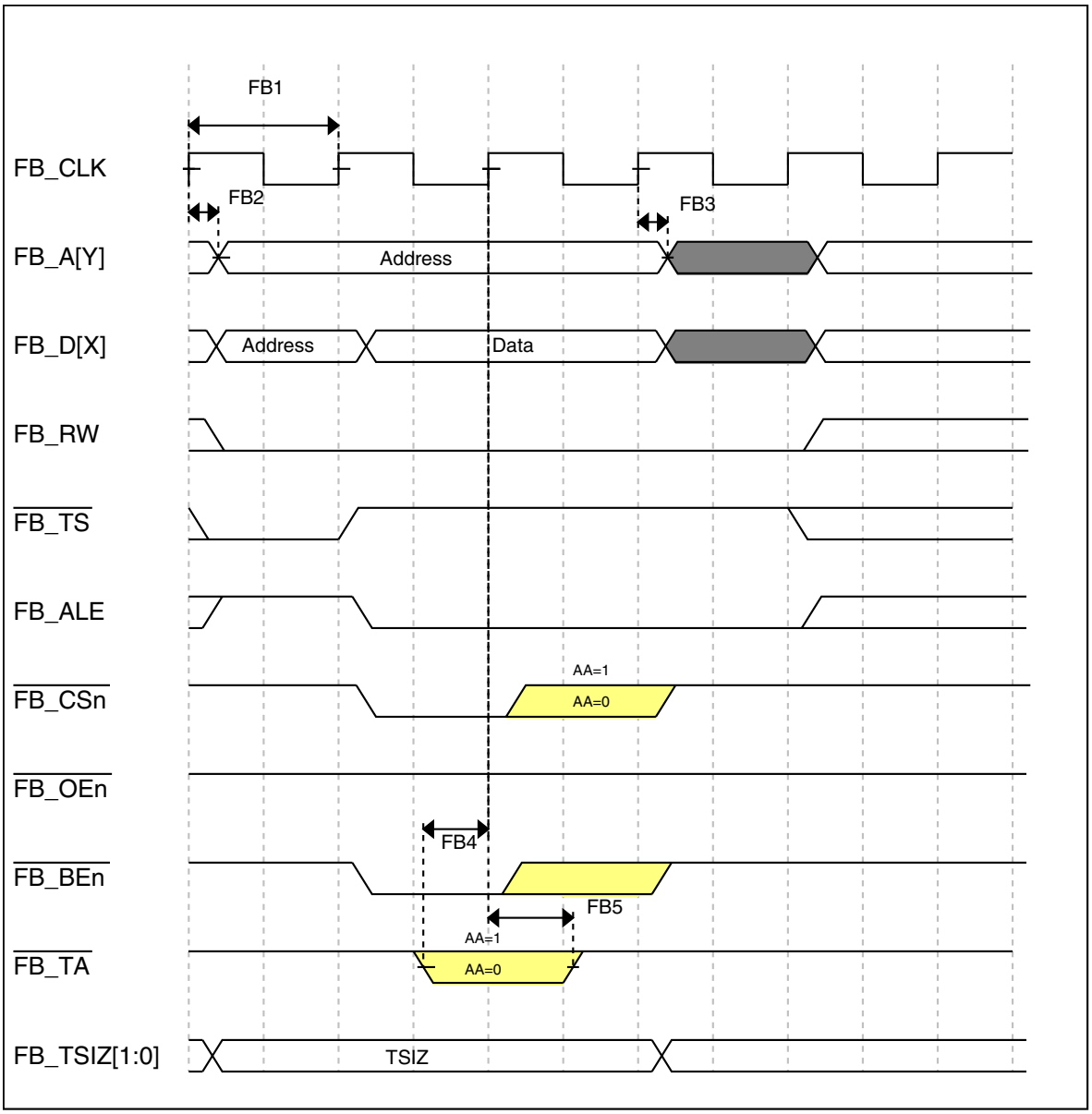

Figure 13. FlexBus write timing diagram

6.5 Security and integrity modules

There are no specifications necessary for the device's security and integrity modules.

6.6 Analog

6.6.1 ADC electrical specifications

The 16-bit accuracy specifications listed in Table 25 and Table 26 are achievable on the differential pins ADCx_DP0, ADCx_DM0.

The ADCx_DP2 and ADCx_DM2 ADC inputs are connected to the PGA outputs and are not direct device pins. Accuracy specifications for these pins are defined in Table 27 and Table 28.

All other ADC channels meet the 13-bit differential/12-bit single-ended accuracy specifications.

6.6.1.1 16-bit ADC operating conditions

Table 25. 16-bit ADC operating conditions

Symbol	Description	Conditions	Min.	Typ.[1]	Max.	Unit	Notes
V_{DDA}	Supply voltage	Absolute	1.71	—	3.6	V	
ΔV_{DDA}	Supply voltage	Delta to V_{DD} (V_{DD}-V_{DDA})	-100	0	+100	mV	2
ΔV_{SSA}	Ground voltage	Delta to V_{SS} (V_{SS}-V_{SSA})	-100	0	+100	mV	2
V_{REFH}	ADC reference voltage high		1.13	V_{DDA}	V_{DDA}	V	
V_{REFL}	Reference voltage low		V_{SSA}	V_{SSA}	V_{SSA}	V	
V_{ADIN}	Input voltage		V_{REFL}	—	V_{REFH}	V	
C_{ADIN}	Input capacitance	• 16 bit modes • 8/10/12 bit modes	— —	8 4	10 5	pF	
R_{ADIN}	Input resistance		—	2	5	kΩ	
R_{AS}	Analog source resistance	13/12 bit modes f_{ADCK} < 4MHz	—	—	5	kΩ	3
f_{ADCK}	ADC conversion clock frequency	≤ 13 bit modes	1.0	—	18.0	MHz	4
f_{ADCK}	ADC conversion clock frequency	16 bit modes	2.0	—	12.0	MHz	4

Table continues on the next page...

Table 25. 16-bit ADC operating conditions (continued)

Symbol	Description	Conditions	Min.	Typ.[1]	Max.	Unit	Notes
C_{rate}	ADC conversion rate	≤ 13 bit modes No ADC hardware averaging Continuous conversions enabled, subsequent conversion time	20.000	—	818.330	Ksps	5
C_{rate}	ADC conversion rate	16 bit modes No ADC hardware averaging Continuous conversions enabled, subsequent conversion time	37.037	—	461.467	Ksps	5

1. Typical values assume V_{DDA} = 3.0 V, Temp = 25°C, f_{ADCK} = 1.0 MHz unless otherwise stated. Typical values are for reference only and are not tested in production.
2. DC potential difference.
3. This resistance is external to MCU. The analog source resistance should be kept as low as possible in order to achieve the best results. The results in this datasheet were derived from a system which has <8 Ω analog source resistance. The R_{AS}/C_{AS} time constant should be kept to <1ns.
4. To use the maximum ADC conversion clock frequency, the ADHSC bit should be set and the ADLPC bit should be clear.
5. For guidelines and examples of conversion rate calculation, download the ADC calculator tool: http://cache.freescale.com/files/soft_dev_tools/software/app_software/converters/ADC_CALCULATOR_CNV.zip?fpsp=1

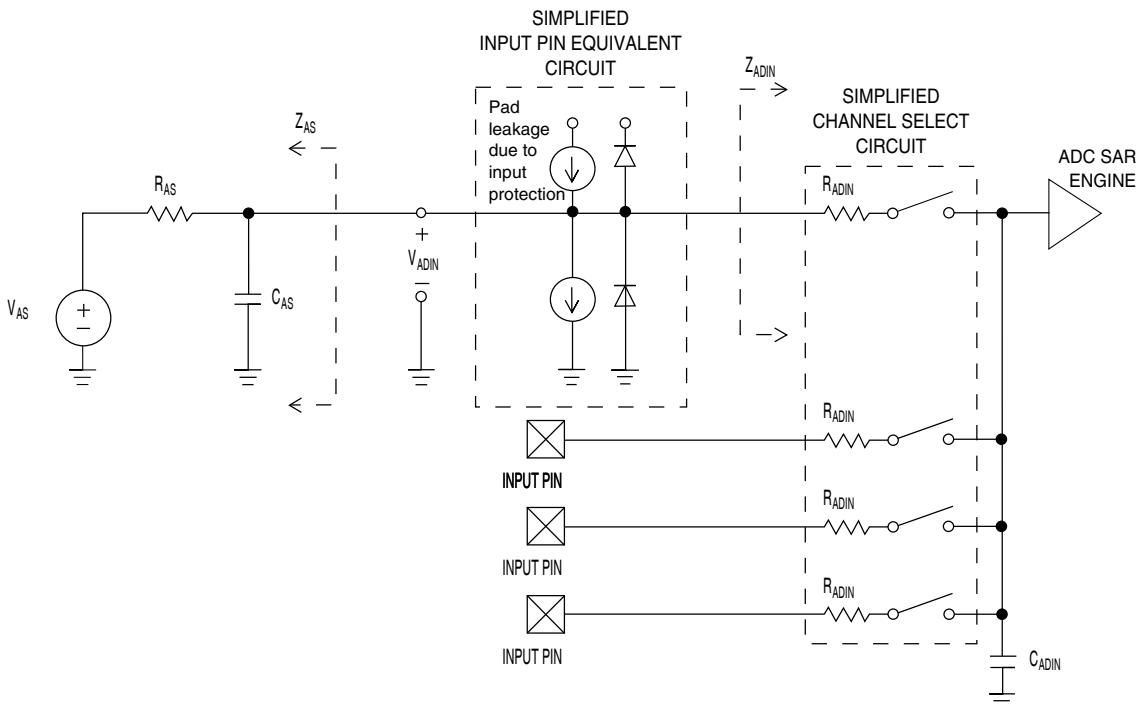

Figure 14. ADC input impedance equivalency diagram

6.6.1.2 16-bit ADC electrical characteristics

Table 26. 16-bit ADC characteristics ($V_{REFH} = V_{DDA}$, $V_{REFL} = V_{SSA}$)

Symbol	Description	Conditions[1]	Min.	Typ.[2]	Max.	Unit	Notes
I_{DDA_ADC}	Supply current		0.215	—	1.7	mA	3
f_{ADACK}	ADC asynchronous clock source	• ADLPC=1, ADHSC=0 • ADLPC=1, ADHSC=1 • ADLPC=0, ADHSC=0 • ADLPC=0, ADHSC=1	1.2 3.0 2.4 4.4	2.4 4.0 5.2 6.2	3.9 7.3 6.1 9.5	MHz MHz MHz MHz	$t_{ADACK} = 1/f_{ADACK}$
	Sample Time	See Reference Manual chapter for sample times					
TUE	Total unadjusted error	• 12 bit modes • <12 bit modes	— —	±4 ±1.4	±6.8 ±2.1	LSB[4]	5
DNL	Differential non-linearity	• 12 bit modes • <12 bit modes	— —	±0.7 ±0.2	-1.1 to +1.9 -0.3 to 0.5	LSB[4]	5
INL	Integral non-linearity	• 12 bit modes • <12 bit modes	— —	±1.0 ±0.5	-2.7 to +1.9 -0.7 to +0.5	LSB[4]	5
E_{FS}	Full-scale error	• 12 bit modes • <12 bit modes	— —	-4 -1.4	-5.4 -1.8	LSB[4]	$V_{ADIN} = V_{DDA}$ 5
E_Q	Quantization error	• 16 bit modes • ≤13 bit modes	— —	-1 to 0 —	— ±0.5	LSB[4]	
ENOB	Effective number of bits	16 bit differential mode • Avg=32 • Avg=4 16 bit single-ended mode • Avg=32 • Avg=4	 12.8 11.9 12.2 11.4	 14.5 13.8 13.9 13.1	 — — — —	 bits bits bits bits	6
SINAD	Signal-to-noise plus distortion	See ENOB	6.02 × ENOB + 1.76			dB	
THD	Total harmonic distortion	16 bit differential mode • Avg=32 16 bit single-ended mode • Avg=32	 — —	 –94 -85	 — —	 dB dB	7

Table continues on the next page...

Table 26. 16-bit ADC characteristics ($V_{REFH} = V_{DDA}$, $V_{REFL} = V_{SSA}$) (continued)

Symbol	Description	Conditions[1]	Min.	Typ.[2]	Max.	Unit	Notes
SFDR	Spurious free dynamic range	16 bit differential mode • Avg=32	82	95	—	dB	7
		16 bit single-ended mode • Avg=32	78	90	—	dB	
E_{IL}	Input leakage error		$I_{In} \times R_{AS}$			mV	I_{In} = leakage current (refer to the MCU's voltage and current operating ratings)
	Temp sensor slope	–40°C to 105°C	—	1.715	—	mV/°C	
V_{TEMP25}	Temp sensor voltage	25°C	—	719	—	mV	

1. All accuracy numbers assume the ADC is calibrated with $V_{REFH} = V_{DDA}$
2. Typical values assume V_{DDA} = 3.0 V, Temp = 25°C, f_{ADCK} = 2.0 MHz unless otherwise stated. Typical values are for reference only and are not tested in production.
3. The ADC supply current depends on the ADC conversion clock speed, conversion rate and the ADLPC bit (low power). For lowest power operation the ADLPC bit should be set, the HSC bit should be clear with 1MHz ADC conversion clock speed.
4. 1 LSB = $(V_{REFH} - V_{REFL})/2^N$
5. ADC conversion clock <16MHz, Max hardware averaging (AVGE = %1, AVGS = %11)
6. Input data is 100 Hz sine wave. ADC conversion clock <12MHz.
7. Input data is 1 kHz sine wave. ADC conversion clock <12MHz.

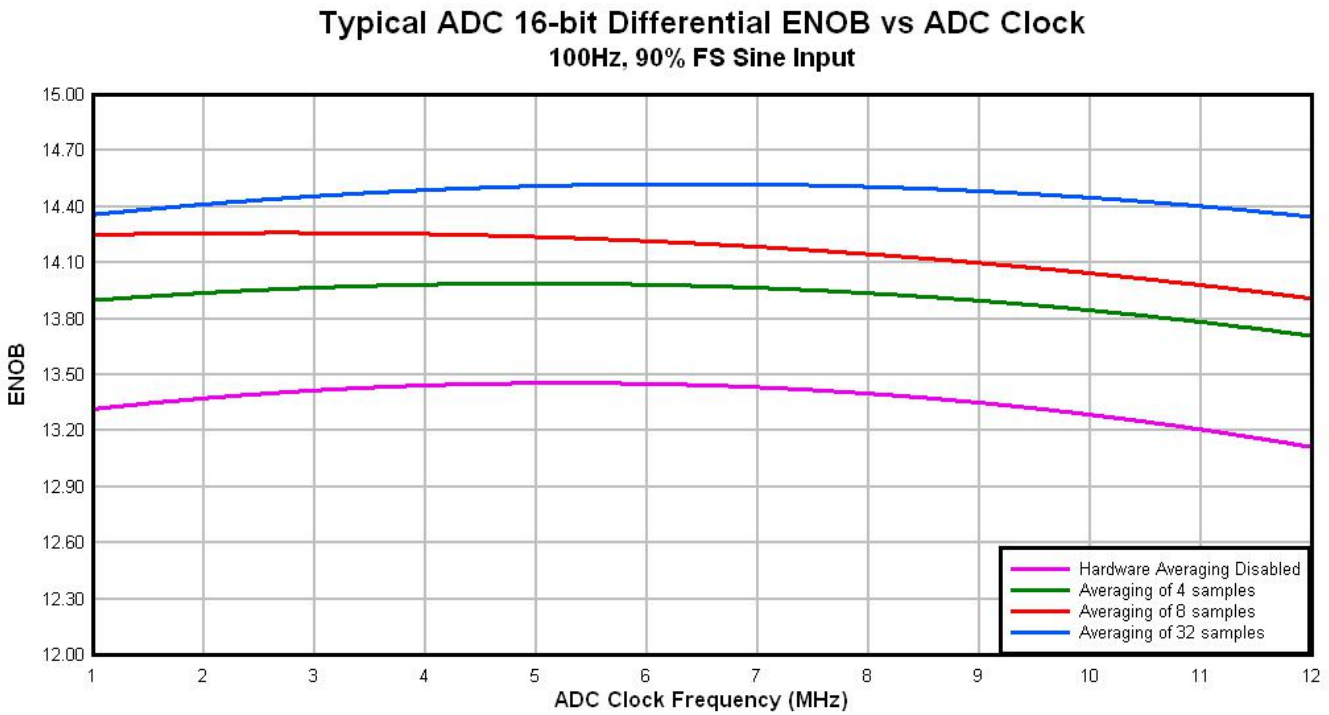

Figure 15. Typical ENOB vs. ADC_CLK for 16-bit differential mode

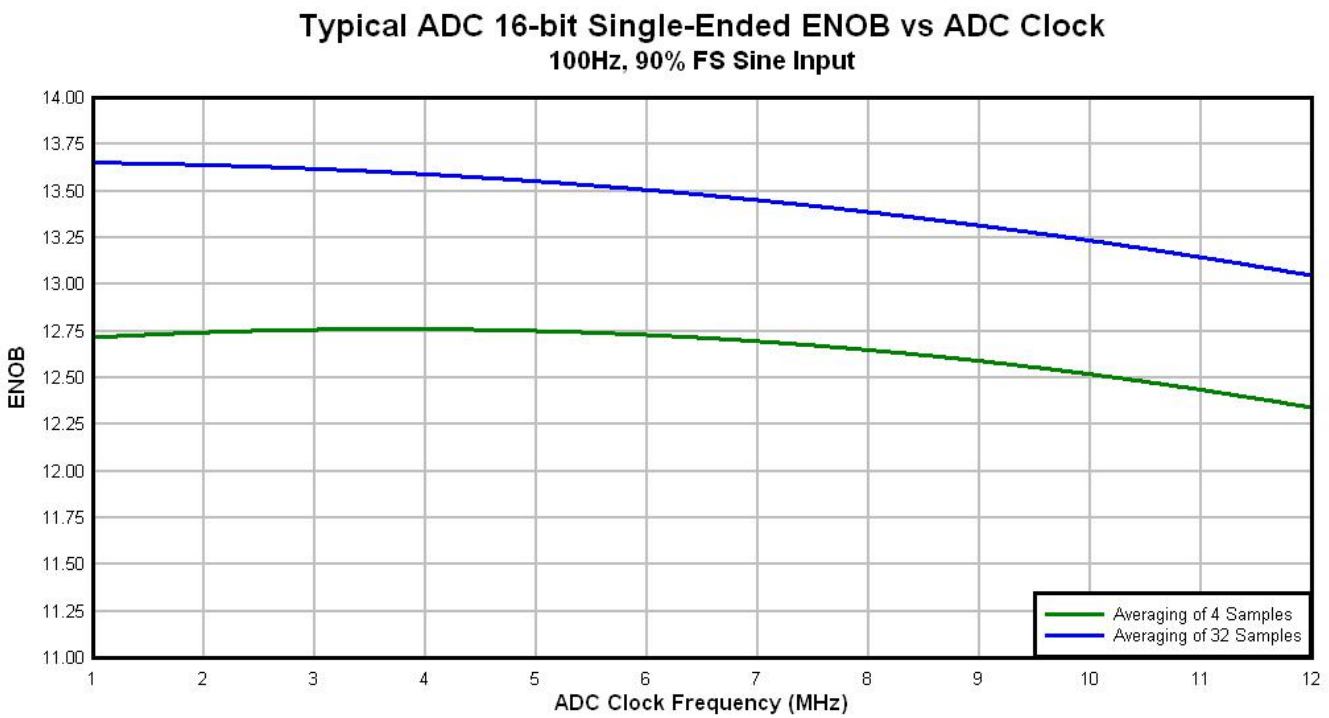

Figure 16. Typical ENOB vs. ADC_CLK for 16-bit single-ended mode

6.6.1.3 16-bit ADC with PGA operating conditions

Table 27. 16-bit ADC with PGA operating conditions

Symbol	Description	Conditions	Min.	Typ.[1]	Max.	Unit	Notes
V_{DDA}	Supply voltage	Absolute	1.71	—	3.6	V	
V_{REFPGA}	PGA ref voltage		VREF_OUT	VREF_OUT	VREF_OUT	V	2, 3
V_{ADIN}	Input voltage		V_{SSA}	—	V_{DDA}	V	
V_{CM}	Input Common Mode range		V_{SSA}	—	V_{DDA}	V	
R_{PGAD}	Differential input impedance	Gain = 1, 2, 4, 8 Gain = 16, 32 Gain = 64	— — —	128 64 32	— — —	kΩ	IN+ to IN-[4]
R_{AS}	Analog source resistance		—	100	—	Ω	5
T_S	ADC sampling time		1.25	—	—	μs	6
C_{rate}	ADC conversion rate	≤ 13 bit modes No ADC hardware averaging Continuous conversions enabled Peripheral clock = 50 MHz	18.484	—	450	Ksps	7
		16 bit modes No ADC hardware averaging Continuous conversions enabled Peripheral clock = 50 MHz	37.037	—	250	Ksps	8

1. Typical values assume V_{DDA} = 3.0 V, Temp = 25°C, f_{ADCK} = 6 MHz unless otherwise stated. Typical values are for reference only and are not tested in production.
2. ADC must be configured to use the internal voltage reference (VREF_OUT)
3. PGA reference is internally connected to the VREF_OUT pin. If the user wishes to drive VREF_OUT with a voltage other than the output of the VREF module, the VREF module must be disabled.
4. For single ended configurations the input impedance of the driven input is $R_{PGAD}/2$
5. The analog source resistance (R_{AS}), external to MCU, should be kept as minimum as possible. Increased R_{AS} causes drop in PGA gain without affecting other performances. This is not dependent on ADC clock frequency.
6. The minimum sampling time is dependent on input signal frequency and ADC mode of operation. A minimum of 1.25μs time should be allowed for F_{in}=4 kHz at 16-bit differential mode. Recommended ADC setting is: ADLSMP=1, ADLSTS=2 at 8 MHz ADC clock.
7. ADC clock = 18 MHz, ADLSMP = 1, ADLST = 00, ADHSC = 1
8. ADC clock = 12 MHz, ADLSMP = 1, ADLST = 01, ADHSC = 1

6.6.1.4 16-bit ADC with PGA characteristics with Chop enabled (ADC_PGA[PGACHPb] =0)

Table 28. 16-bit ADC with PGA characteristics

Symbol	Description	Conditions	Min.	Typ.[1]	Max.	Unit	Notes
I_{DDA_PGA}	Supply current	Low power (ADC_PGA[PGALPb]=0)	—	420	644	μA	2
I_{DC_PGA}	Input DC current		$\frac{2}{R_{PGAD}}\left(\frac{(V_{REFPGA}\times 0.583)-V_{CM}}{(Gain+1)}\right)$			A	3
		Gain =1, V_{REFPGA}=1.2V, V_{CM}=0.5V	—	1.54	—	μA	
		Gain =64, V_{REFPGA}=1.2V, V_{CM}=0.1V	—	0.57	—	μA	
G	Gain[4]	• PGAG=0 • PGAG=1 • PGAG=2 • PGAG=3 • PGAG=4 • PGAG=5 • PGAG=6	0.95 1.9 3.8 7.6 15.2 30.0 58.8	1 2 4 8 16 31.6 63.3	1.05 2.1 4.2 8.4 16.6 33.2 67.8		$R_{AS} < 100\Omega$
BW	Input signal bandwidth	• 16-bit modes • < 16-bit modes	— —	— —	4 40	kHz kHz	
PSRR	Power supply rejection ratio	Gain=1	—	-84	—	dB	V_{DDA}= 3V ±100mV, f_{VDDA}= 50Hz, 60Hz
CMRR	Common mode rejection ratio	• Gain=1 • Gain=64	— —	-84 -85	— —	dB dB	V_{CM}= 500mVpp, f_{VCM}= 50Hz, 100Hz
V_{OFS}	Input offset voltage		—	0.2	—	mV	Output offset = V_{OFS}*(Gain+1)
T_{GSW}	Gain switching settling time		—	—	10	μs	5
dG/dT	Gain drift over full temperature range	• Gain=1 • Gain=64	— —	6 31	10 42	ppm/°C ppm/°C	
dG/dV_{DDA}	Gain drift over supply voltage	• Gain=1 • Gain=64	— —	0.07 0.14	0.21 0.31	%/V %/V	V_{DDA} from 1.71 to 3.6V

Table continues on the next page...

Table 28. 16-bit ADC with PGA characteristics (continued)

Symbol	Description	Conditions	Min.	Typ.[1]	Max.	Unit	Notes
E_{IL}	Input leakage error	All modes	$I_{In} \times R_{AS}$			mV	I_{In} = leakage current (refer to the MCU's voltage and current operating ratings)
$V_{PP,DIFF}$	Maximum differential input signal swing		$\left(\frac{(\min(V_x, V_{DDA}-V_x)-0.2)\times 4}{\text{Gain}}\right)$ where $V_X = V_{REFPGA} \times 0.583$			V	6
SNR	Signal-to-noise ratio	• Gain=1 • Gain=64	80 52	90 66	— —	dB dB	16-bit differential mode, Average=32
THD	Total harmonic distortion	• Gain=1 • Gain=64	85 49	100 95	— —	dB dB	16-bit differential mode, Average=32, f_{in}=100Hz
SFDR	Spurious free dynamic range	• Gain=1 • Gain=64	85 53	105 88	— —	dB dB	16-bit differential mode, Average=32, f_{in}=100Hz
ENOB	Effective number of bits	• Gain=1, Average=4 • Gain=64, Average=4 • Gain=1, Average=32 • Gain=2, Average=32 • Gain=4, Average=32 • Gain=8, Average=32 • Gain=16, Average=32 • Gain=32, Average=32 • Gain=64, Average=32	11.6 7.2 12.8 11.0 7.9 7.3 6.8 6.8 7.5	13.4 9.6 14.5 14.3 13.8 13.1 12.5 11.5 10.6	— — — — — — — — —	bits bits bits bits bits bits bits bits bits	16-bit differential mode,f_{in}=100Hz
SINAD	Signal-to-noise plus distortion ratio	See ENOB	6.02 × ENOB + 1.76			dB	

1. Typical values assume V_{DDA} =3.0V, Temp=25°C, f_{ADCK}=6MHz unless otherwise stated.
2. This current is a PGA module adder, in addition to ADC conversion currents.
3. Between IN+ and IN-. The PGA draws a DC current from the input terminals. The magnitude of the DC current is a strong function of input common mode voltage (V_{CM}) and the PGA gain.
4. Gain = 2^{PGAG}
5. After changing the PGA gain setting, a minimum of 2 ADC+PGA conversions should be ignored.
6. Limit the input signal swing so that the PGA does not saturate during operation. Input signal swing is dependent on the PGA reference voltage and gain setting.

6.6.2 CMP and 6-bit DAC electrical specifications

Table 29. Comparator and 6-bit DAC electrical specifications

Symbol	Description	Min.	Typ.	Max.	Unit
V_{DD}	Supply voltage	1.71	—	3.6	V
I_{DDHS}	Supply current, High-speed mode (EN=1, PMODE=1)	—	—	200	μA
I_{DDLS}	Supply current, low-speed mode (EN=1, PMODE=0)	—	—	20	μA
V_{AIN}	Analog input voltage	V_{SS} – 0.3	—	V_{DD}	V
V_{AIO}	Analog input offset voltage	—	—	20	mV
V_H	Analog comparator hysteresis[1]				
	• CR0[HYSTCTR] = 00	—	5	—	mV
	• CR0[HYSTCTR] = 01	—	10	—	mV
	• CR0[HYSTCTR] = 10	—	20	—	mV
	• CR0[HYSTCTR] = 11	—	30	—	mV
V_{CMPOh}	Output high	V_{DD} – 0.5	—	—	V
V_{CMPOl}	Output low	—	—	0.5	V
t_{DHS}	Propagation delay, high-speed mode (EN=1, PMODE=1)	20	50	200	ns
t_{DLS}	Propagation delay, low-speed mode (EN=1, PMODE=0)	80	250	600	ns
	Analog comparator initialization delay[2]	—	—	40	μs
I_{DAC6b}	6-bit DAC current adder (enabled)	—	7	—	μA
INL	6-bit DAC integral non-linearity	–0.5	—	0.5	LSB[3]
DNL	6-bit DAC differential non-linearity	–0.3	—	0.3	LSB

1. Typical hysteresis is measured with input voltage range limited to 0.6 to V_{DD}-0.6V.
2. Comparator initialization delay is defined as the time between software writes to change control inputs (Writes to DACEN, VRSEL, PSEL, MSEL, VOSEL) and the comparator output settling to a stable level.
3. 1 LSB = $V_{reference}$/64

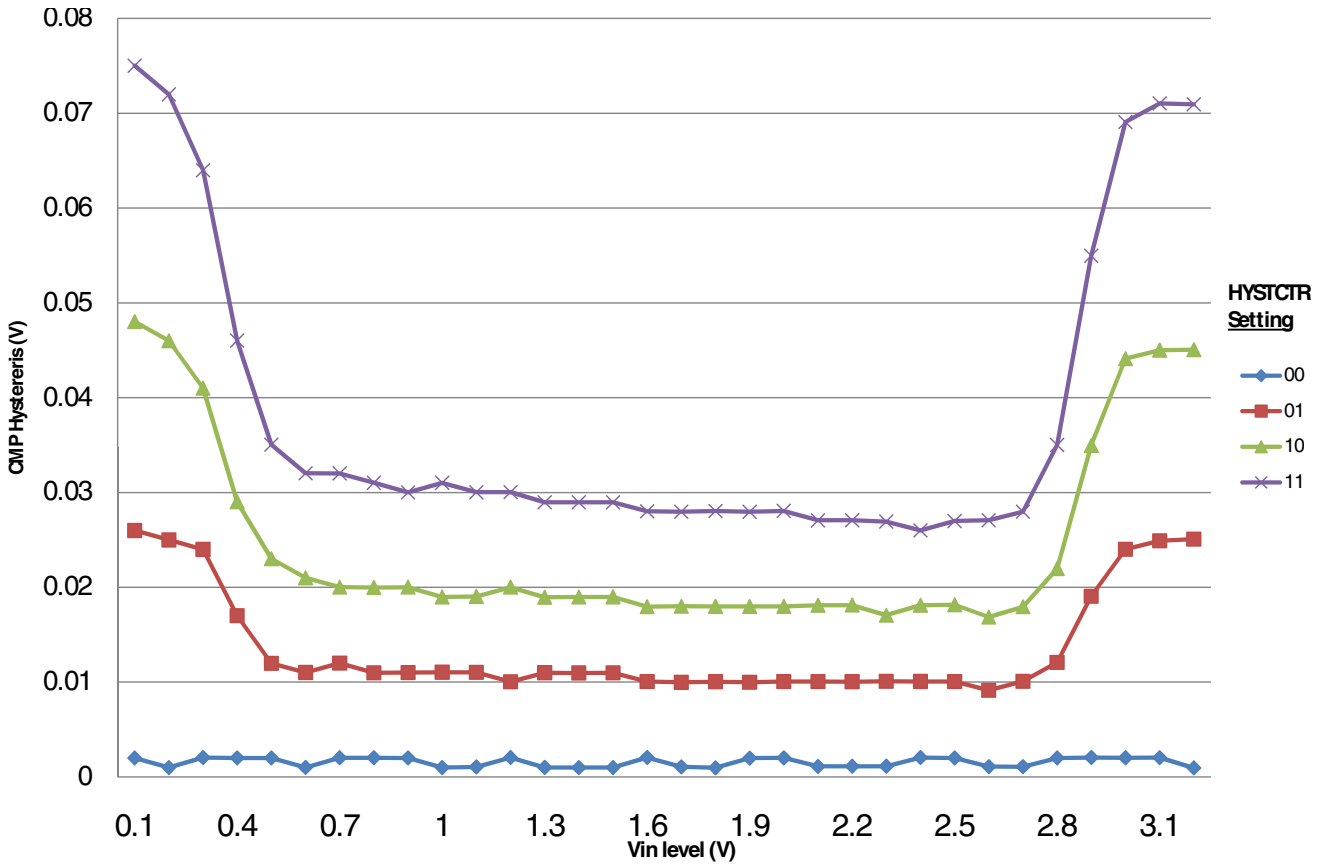

Figure 17. Typical hysteresis vs. Vin level (VDD=3.3V, PMODE=0)

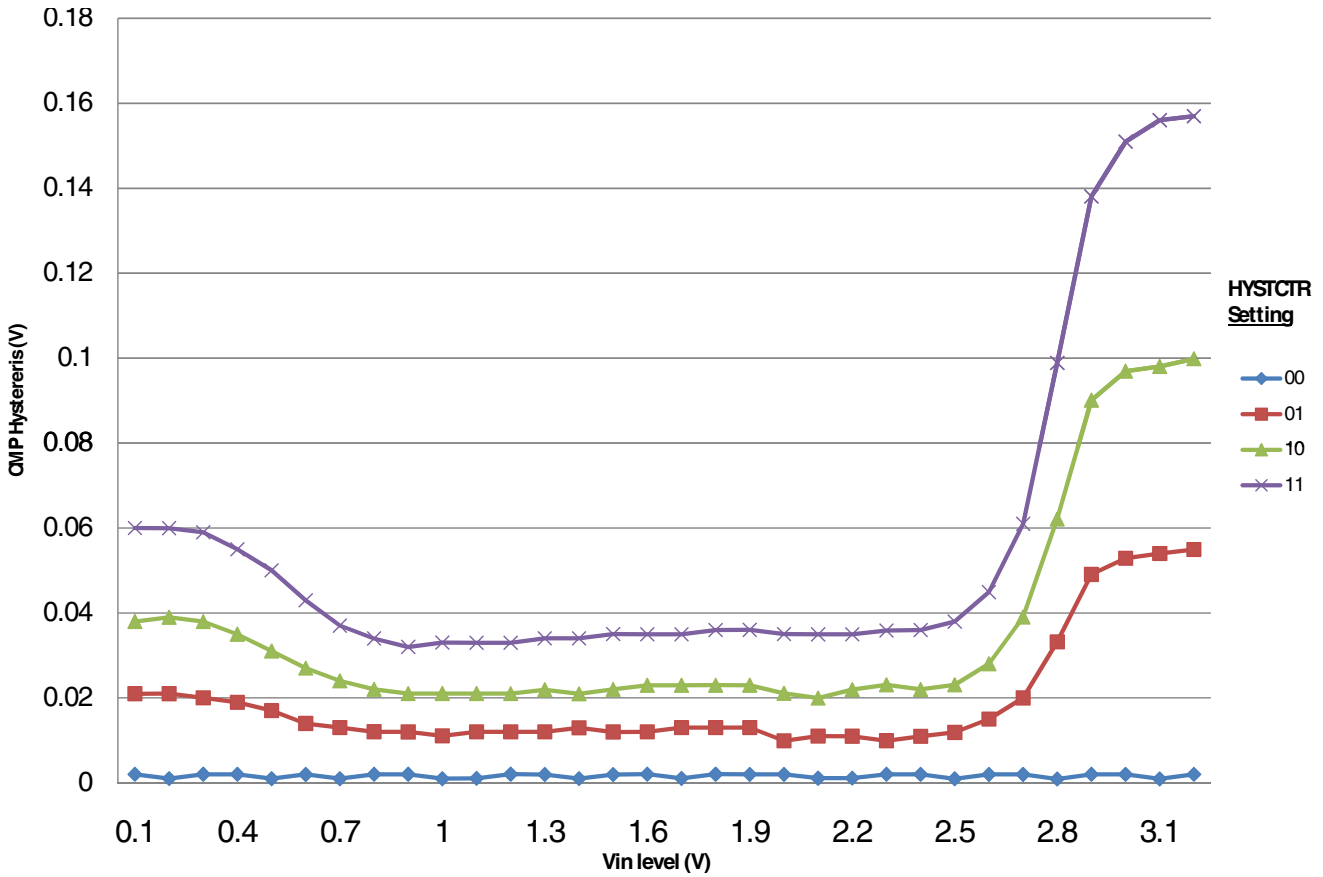

Figure 18. Typical hysteresis vs. Vin level (VDD=3.3V, PMODE=1)

6.6.3 12-bit DAC electrical characteristics

6.6.3.1 12-bit DAC operating requirements

Table 30. 12-bit DAC operating requirements

Symbol	Desciption	Min.	Max.	Unit	Notes
V_{DDA}	Supply voltage	1.71	3.6	V	
V_{DACR}	Reference voltage	1.13	3.6	V	1
T_A	Temperature	–40	105	°C	
C_L	Output load capacitance	—	100	pF	2
I_L	Output load current	—	1	mA	

1. The DAC reference can be selected to be VDDA or the voltage output of the VREF module (VREF_OUT)
2. A small load capacitance (47 pF) can improve the bandwidth performance of the DAC

6.6.3.2 12-bit DAC operating behaviors

Table 31. 12-bit DAC operating behaviors

Symbol	Description	Min.	Typ.	Max.	Unit	Notes
I_{DDA_DACLP}	Supply current — low-power mode	—	—	150	μA	
I_{DDA_DACHP}	Supply current — high-speed mode	—	—	700	μA	
t_{DACLP}	Full-scale settling time (0x080 to 0xF7F) — low-power mode	—	100	200	μs	1
t_{DACHP}	Full-scale settling time (0x080 to 0xF7F) — high-power mode	—	15	30	μs	1
$t_{CCDACLP}$	Code-to-code settling time (0xBF8 to 0xC08) — low-power mode and high-speed mode	—	0.7	1	μs	1
$V_{dacoutl}$	DAC output voltage range low — high-speed mode, no load, DAC set to 0x000	—	—	100	mV	
$V_{dacouth}$	DAC output voltage range high — high-speed mode, no load, DAC set to 0xFFF	V_{DACR} −100	—	V_{DACR}	mV	
INL	Integral non-linearity error — high speed mode	—	—	±8	LSB	2
DNL	Differential non-linearity error — V_{DACR} > 2 V	—	—	±1	LSB	3
DNL	Differential non-linearity error — V_{DACR} = VREF_OUT	—	—	±1	LSB	4
V_{OFFSET}	Offset error	—	±0.4	±0.8	%FSR	5
E_G	Gain error	—	±0.1	±0.6	%FSR	5
PSRR	Power supply rejection ratio, V_{DDA} > = 2.4 V	60		90	dB	
T_{CO}	Temperature coefficient offset voltage	—	3.7	—	μV/C	6
T_{GE}	Temperature coefficient gain error	—	0.000421	—	%FSR/C	
Rop	Output resistance load = 3 kΩ	—	—	250	Ω	
SR	Slew rate -80h→ F7Fh→ 80h • High power (SP_{HP}) • Low power (SP_{LP})	 1.2 0.05	 1.7 0.12	 — —	V/μs	
CT	Channel to channel cross talk	—	—	-80	dB	
BW	3dB bandwidth • High power (SP_{HP}) • Low power (SP_{LP})	 550 40	 — —	 — —	kHz	

1. Settling within ±1 LSB
2. The INL is measured for 0+100mV to V_{DACR}–100 mV
3. The DNL is measured for 0+100 mV to V_{DACR}–100 mV
4. The DNL is measured for 0+100mV to V_{DACR}–100 mV with V_{DDA} > 2.4V
5. Calculated by a best fit curve from V_{SS}+100 mV to V_{DACR}–100 mV

6. VDDA = 3.0V, reference select set for VDDA (DACx_CO:DACRFS = 1), high power mode(DACx_C0:LPEN = 0), DAC set to 0x800, Temp range from -40C to 105C

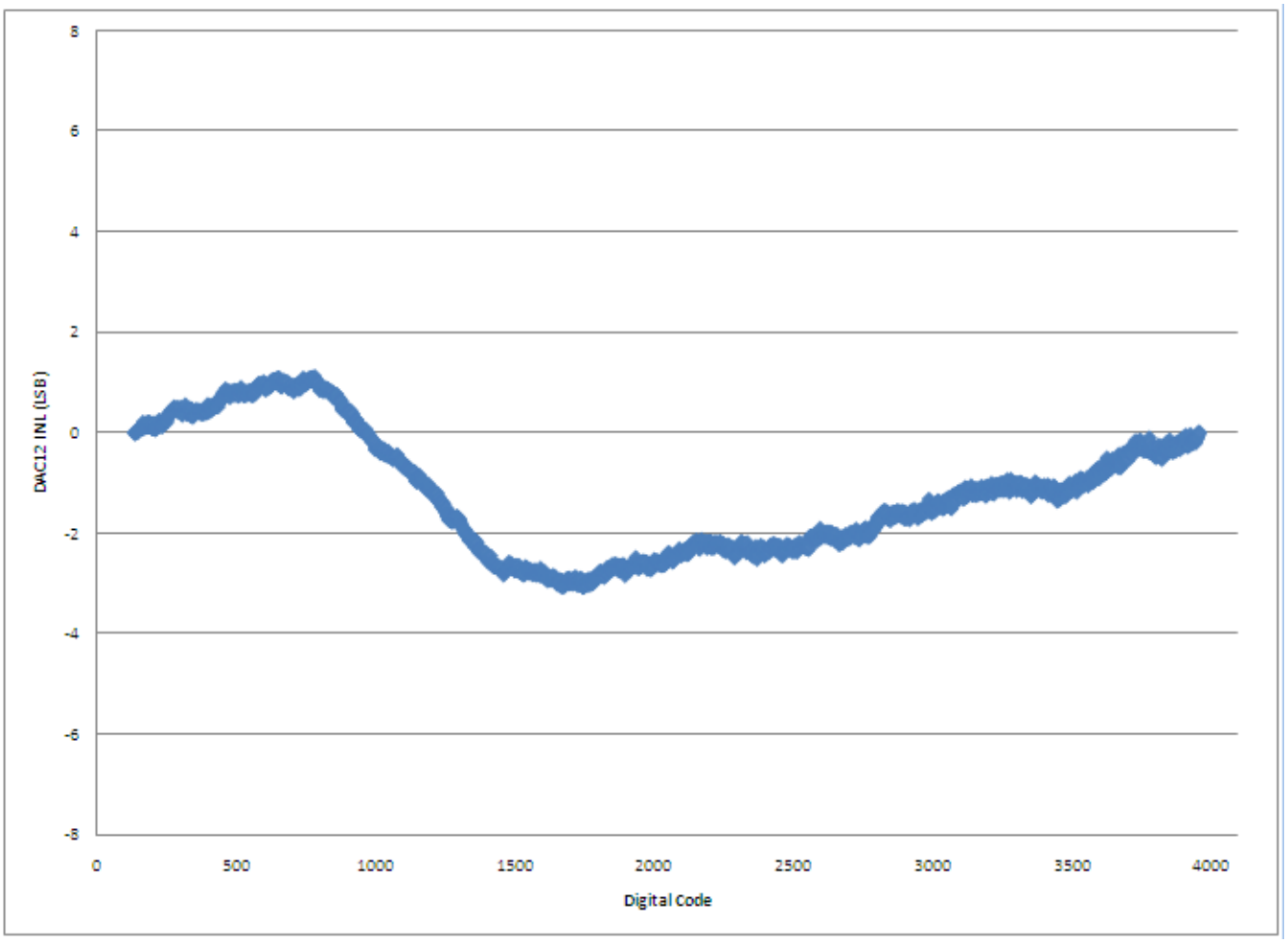

Figure 19. Typical INL error vs. digital code

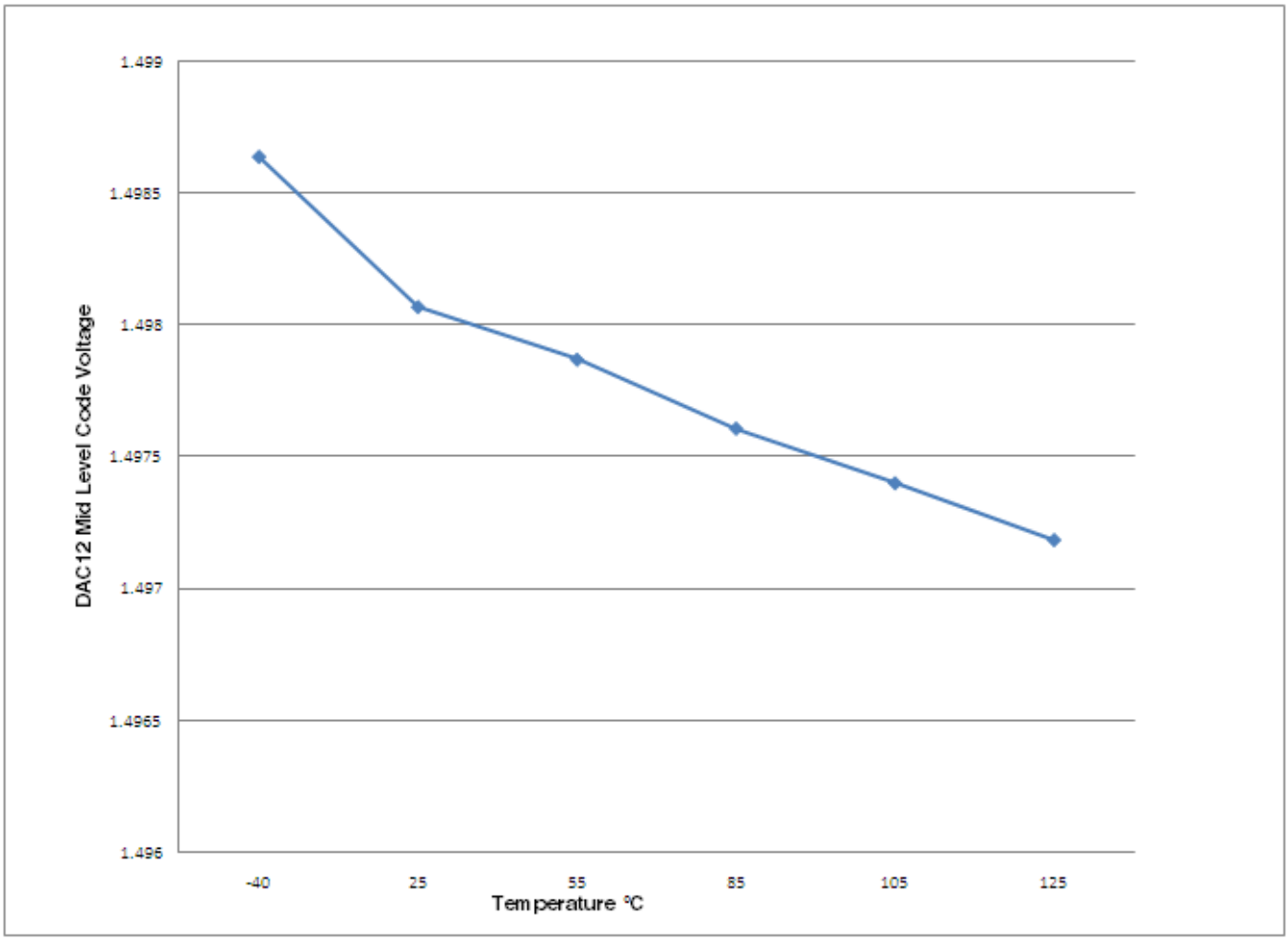

Figure 20. Offset at half scale vs. temperature

6.6.4 Voltage reference electrical specifications

Table 32. VREF full-range operating requirements

Symbol	Description	Min.	Max.	Unit	Notes
V_{DDA}	Supply voltage	1.71	3.6	V	
T_A	Temperature	–40	105	°C	
C_L	Output load capacitance	100		nF	1, 2

1. C_L must be connected to VREF_OUT if the VREF_OUT functionality is being used for either an internal or external reference.
2. The load capacitance should not exceed +/-25% of the nominal specified C_L value over the operating temperature range of the device.

Table 33. VREF full-range operating behaviors

Symbol	Description	Min.	Typ.	Max.	Unit	Notes
V_{out}	Voltage reference output with factory trim at nominal V_{DDA} and temperature=25C	1.1915	1.195	1.1977	V	
V_{out}	Voltage reference output — factory trim	1.1584	—	1.2376	V	
V_{out}	Voltage reference output — user trim	1.193	—	1.197	V	
V_{step}	Voltage reference trim step	—	0.5	—	mV	
V_{tdrift}	Temperature drift (Vmax -Vmin across the full temperature range)	—	—	80	mV	
I_{bg}	Bandgap only current	—	—	80	μA	1
I_{lp}	Low-power buffer current	—	—	360	uA	1
I_{hp}	High-power buffer current	—	—	1	mA	1
ΔV_{LOAD}	Load regulation • current = ± 1.0 mA	— —	 200	 —	μV	1, 2
T_{stup}	Buffer startup time	—	—	20	μs	
V_{vdrift}	Voltage drift (Vmax - Vmin across the full voltage range)	—	2	—	mV	1

1. See the chip's Reference Manual for the appropriate settings of the VREF Status and Control register.
2. Load regulation voltage is the difference between the VREF_OUT voltage with no load vs. voltage with defined load

Table 34. VREF limited-range operating requirements

Symbol	Description	Min.	Max.	Unit	Notes
T_A	Temperature	0	50	°C	

Table 35. VREF limited-range operating behaviors

Symbol	Description	Min.	Max.	Unit	Notes
V_{out}	Voltage reference output with factory trim	1.173	1.225	V	

Symbol	Description	Min	Max	Unit	Notes
VREFH	Voltage reference output with factory trim	1.173	1.225	V	
VREFL	Voltage reference output	0.38	0.42	V	
IBIASP_AFE_4μA	P-bias current output	3.5μ	4.5μ	A	

6.7 Timers

See General switching specifications.

6.8 Communication interfaces

6.8.1 USB electrical specifications

The USB electricals for the USB On-the-Go module conform to the standards documented by the Universal Serial Bus Implementers Forum. For the most up-to-date standards, visit http://www.usb.org.

6.8.2 USB DCD electrical specifications

Table 37. USB DCD electrical specifications

Symbol	Description	Min.	Typ.	Max.	Unit
V_{DP_SRC}	USB_DP source voltage (up to 250 μA)	0.5	—	0.7	V
V_{LGC}	Threshold voltage for logic high	0.8	—	2.0	V
I_{DP_SRC}	USB_DP source current	7	10	13	μA
I_{DM_SINK}	USB_DM sink current	50	100	150	μA
R_{DM_DWN}	D- pulldown resistance for data pin contact detect	14.25	—	24.8	kΩ
V_{DAT_REF}	Data detect voltage	0.25	0.33	0.4	V

6.8.3 USB VREG electrical specifications

Table 38. USB VREG electrical specifications

Symbol	Description	Min.	Typ.[1]	Max.	Unit	Notes
VREGIN	Input supply voltage	2.7	—	5.5	V	
I_{DDon}	Quiescent current — Run mode, load current equal zero, input supply (VREGIN) > 3.6 V	—	120	186	μA	
I_{DDstby}	Quiescent current — Standby mode, load current equal zero	—	1.1	1.54	μA	
I_{DDoff}	Quiescent current — Shutdown mode • VREGIN = 5.0 V and temperature=25C • Across operating voltage and temperature	— —	650 —	— 4	nA μA	
$I_{LOADrun}$	Maximum load current — Run mode	—	—	120	mA	

Table continues on the next page...

Table 38. USB VREG electrical specifications (continued)

Symbol	Description	Min.	Typ.[1]	Max.	Unit	Notes
$I_{LOADstby}$	Maximum load current — Standby mode	—	—	1	mA	
$V_{Reg33out}$	Regulator output voltage — Input supply (VREGIN) > 3.6 V • Run mode • Standby mode	 3 2.1	 3.3 2.8	 3.6 3.6	 V V	
$V_{Reg33out}$	Regulator output voltage — Input supply (VREGIN) < 3.6 V, pass-through mode	2.1	—	3.6	V	2
C_{OUT}	External output capacitor	1.76	2.2	8.16	μF	
ESR	External output capacitor equivalent series resistance	1	—	100	mΩ	
I_{LIM}	Short circuit current	—	290	—	mA	

1. Typical values assume VREGIN = 5.0 V, Temp = 25 °C unless otherwise stated.
2. Operating in pass-through mode: regulator output voltage equal to the input voltage minus a drop proportional to I_{Load}.

6.8.4 CAN switching specifications

See General switching specifications.

6.8.5 DSPI switching specifications (limited voltage range)

The DMA Serial Peripheral Interface (DSPI) provides a synchronous serial bus with master and slave operations. Many of the transfer attributes are programmable. The tables below provide DSPI timing characteristics for classic SPI timing modes. Refer to the DSPI chapter of the Reference Manual for information on the modified transfer formats used for communicating with slower peripheral devices.

Table 39. Master mode DSPI timing (limited voltage range)

Num	Description	Min.	Max.	Unit	Notes
	Operating voltage	2.7	3.6	V	
	Frequency of operation	—	25	MHz	
DS1	DSPI_SCK output cycle time	2 x t_{BUS}	—	ns	
DS2	DSPI_SCK output high/low time	(t_{SCK}/2) – 2	(t_{SCK}/2) + 2	ns	
DS3	DSPI_PCS*n* valid to DSPI_SCK delay	(t_{BUS} x 2) – 2	—	ns	1

Table continues on the next page...

Table 39. Master mode DSPI timing (limited voltage range) (continued)

Num	Description	Min.	Max.	Unit	Notes
DS4	DSPI_SCK to DSPI_PCS*n* invalid delay	(t_{BUS} x 2) – 2	—	ns	2
DS5	DSPI_SCK to DSPI_SOUT valid	—	8.5	ns	
DS6	DSPI_SCK to DSPI_SOUT invalid	–2	—	ns	
DS7	DSPI_SIN to DSPI_SCK input setup	15	—	ns	
DS8	DSPI_SCK to DSPI_SIN input hold	0	—	ns	

1. The delay is programmable in SPIx_CTARn[PSSCK] and SPIx_CTARn[CSSCK].
2. The delay is programmable in SPIx_CTARn[PASC] and SPIx_CTARn[ASC].

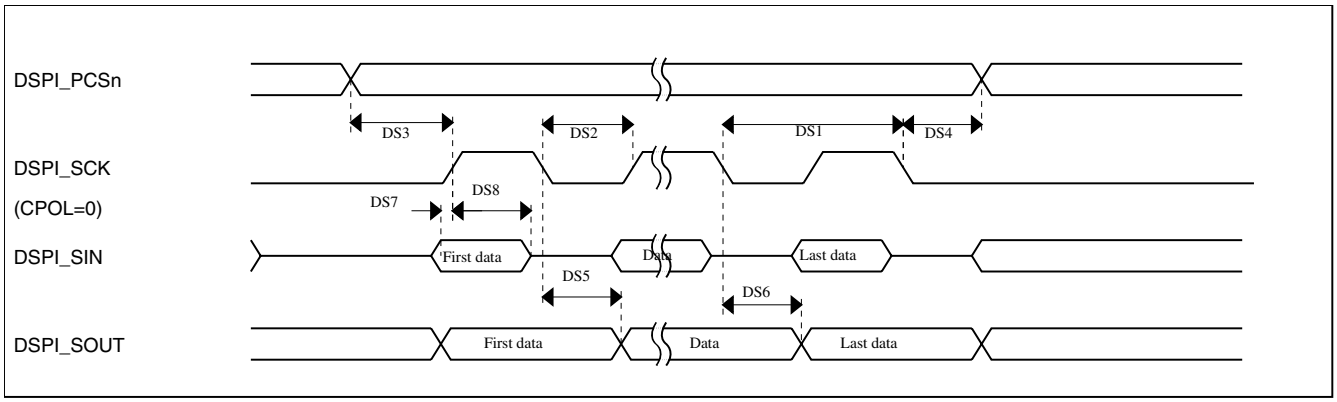

Figure 21. DSPI classic SPI timing — master mode

Table 40. Slave mode DSPI timing (limited voltage range)

Num	Description	Min.	Max.	Unit
	Operating voltage	2.7	3.6	V
	Frequency of operation		12.5	MHz
DS9	DSPI_SCK input cycle time	4 x t_{BUS}	—	ns
DS10	DSPI_SCK input high/low time	(t_{SCK}/2) – 2	(t_{SCK}/2) + 2	ns
DS11	DSPI_SCK to DSPI_SOUT valid	—	10	ns
DS12	DSPI_SCK to DSPI_SOUT invalid	0	—	ns
DS13	DSPI_SIN to DSPI_SCK input setup	2	—	ns
DS14	DSPI_SCK to DSPI_SIN input hold	7	—	ns
DS15	$\overline{\text{DSPI_SS}}$ active to DSPI_SOUT driven	—	14	ns
DS16	$\overline{\text{DSPI_SS}}$ inactive to DSPI_SOUT not driven	—	14	ns

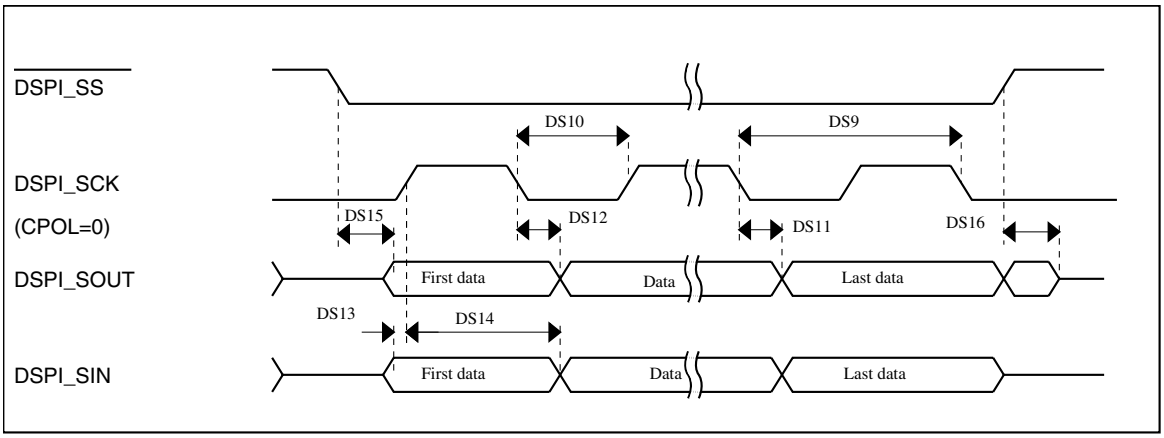

Figure 22. DSPI classic SPI timing — slave mode

6.8.6 DSPI switching specifications (full voltage range)

The DMA Serial Peripheral Interface (DSPI) provides a synchronous serial bus with master and slave operations. Many of the transfer attributes are programmable. The tables below provides DSPI timing characteristics for classic SPI timing modes. Refer to the DSPI chapter of the Reference Manual for information on the modified transfer formats used for communicating with slower peripheral devices.

Table 41. Master mode DSPI timing (full voltage range)

Num	Description	Min.	Max.	Unit	Notes
	Operating voltage	1.71	3.6	V	1
	Frequency of operation	—	12.5	MHz	
DS1	DSPI_SCK output cycle time	4 x t_{BUS}	—	ns	
DS2	DSPI_SCK output high/low time	(t_{SCK}/2) - 4	($t_{SCK/2)}$ + 4	ns	
DS3	DSPI_PCS*n* valid to DSPI_SCK delay	(t_{BUS} x 2) – 4	—	ns	2
DS4	DSPI_SCK to DSPI_PCS*n* invalid delay	(t_{BUS} x 2) – 4	—	ns	3
DS5	DSPI_SCK to DSPI_SOUT valid	—	10	ns	
DS6	DSPI_SCK to DSPI_SOUT invalid	-4.5	—	ns	
DS7	DSPI_SIN to DSPI_SCK input setup	20.5	—	ns	
DS8	DSPI_SCK to DSPI_SIN input hold	0	—	ns	

1. The DSPI module can operate across the entire operating voltage for the processor, but to run across the full voltage range the maximum frequency of operation is reduced.
2. The delay is programmable in SPIx_CTARn[PSSCK] and SPIx_CTARn[CSSCK].
3. The delay is programmable in SPIx_CTARn[PASC] and SPIx_CTARn[ASC].

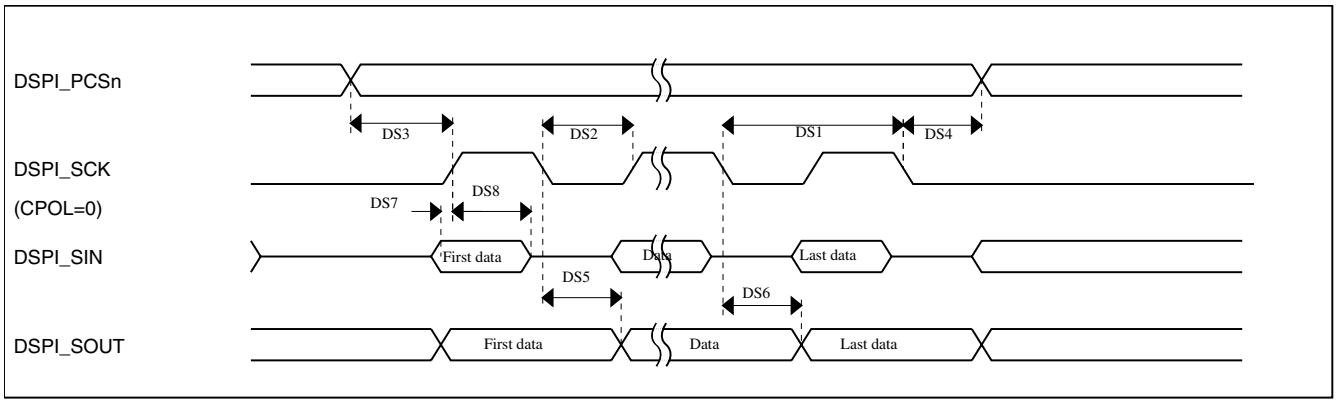

Figure 23. DSPI classic SPI timing — master mode

Table 42. Slave mode DSPI timing (full voltage range)

Num	Description	Min.	Max.	Unit
	Operating voltage	1.71	3.6	V
	Frequency of operation	—	6.25	MHz
DS9	DSPI_SCK input cycle time	8 x t_{BUS}	—	ns
DS10	DSPI_SCK input high/low time	(t_{SCK}/2) - 4	($t_{SCK/2)}$ + 4	ns
DS11	DSPI_SCK to DSPI_SOUT valid	—	20	ns
DS12	DSPI_SCK to DSPI_SOUT invalid	0	—	ns
DS13	DSPI_SIN to DSPI_SCK input setup	2	—	ns
DS14	DSPI_SCK to DSPI_SIN input hold	7	—	ns
DS15	$\overline{\text{DSPI_SS}}$ active to DSPI_SOUT driven	—	19	ns
DS16	$\overline{\text{DSPI_SS}}$ inactive to DSPI_SOUT not driven	—	19	ns

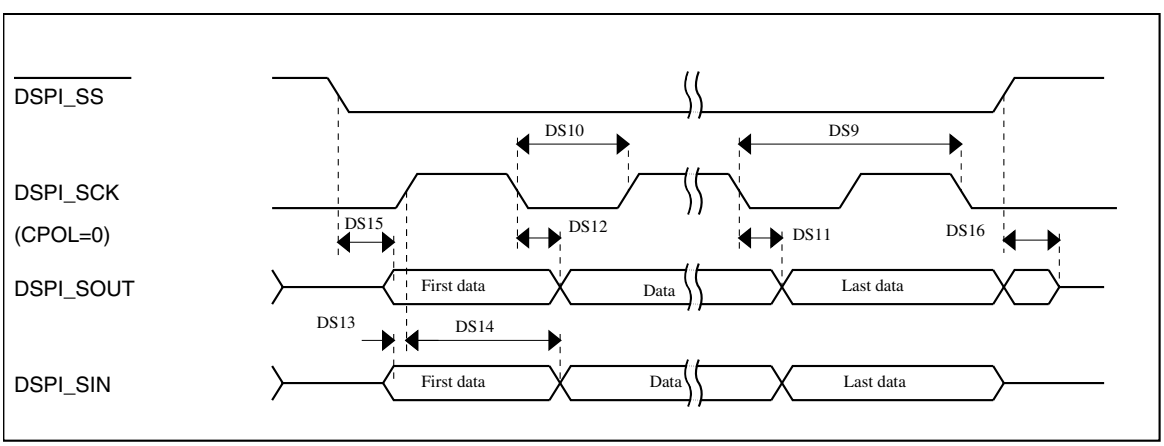

Figure 24. DSPI classic SPI timing — slave mode

6.8.7 I²C switching specifications

See General switching specifications.

6.8.8 UART switching specifications

See General switching specifications.

6.8.9 I2S/SAI Switching Specifications

This section provides the AC timing for the I2S/SAI module in master mode (clocks are driven) and slave mode (clocks are input). All timing is given for noninverted serial clock polarity (TCR2[BCP] is 0, RCR2[BCP] is 0) and a noninverted frame sync (TCR4[FSP] is 0, RCR4[FSP] is 0). If the polarity of the clock and/or the frame sync have been inverted, all the timing remains valid by inverting the bit clock signal (BCLK) and/or the frame sync (FS) signal shown in the following figures.

6.8.9.1 Normal Run, Wait and Stop mode performance over the full operating voltage range

This section provides the operating performance over the full operating voltage for the device in Normal Run, Wait and Stop modes.

Table 43. I2S/SAI master mode timing in Normal Run, Wait and Stop modes (full voltage range)

Num.	Characteristic	Min.	Max.	Unit
	Operating voltage	1.71	3.6	V
S1	I2S_MCLK cycle time	40	—	ns
S2	I2S_MCLK pulse width high/low	45%	55%	MCLK period
S3	I2S_TX_BCLK/I2S_RX_BCLK cycle time (output)	80	—	ns
S4	I2S_TX_BCLK/I2S_RX_BCLK pulse width high/low	45%	55%	BCLK period
S5	I2S_TX_BCLK/I2S_RX_BCLK to I2S_TX_FS/ I2S_RX_FS output valid	—	15	ns
S6	I2S_TX_BCLK/I2S_RX_BCLK to I2S_TX_FS/ I2S_RX_FS output invalid	-1.0	—	ns
S7	I2S_TX_BCLK to I2S_TXD valid	—	15	ns
S8	I2S_TX_BCLK to I2S_TXD invalid	0	—	ns
S9	I2S_RXD/I2S_RX_FS input setup before I2S_RX_BCLK	20.5	—	ns
S10	I2S_RXD/I2S_RX_FS input hold after I2S_RX_BCLK	0	—	ns

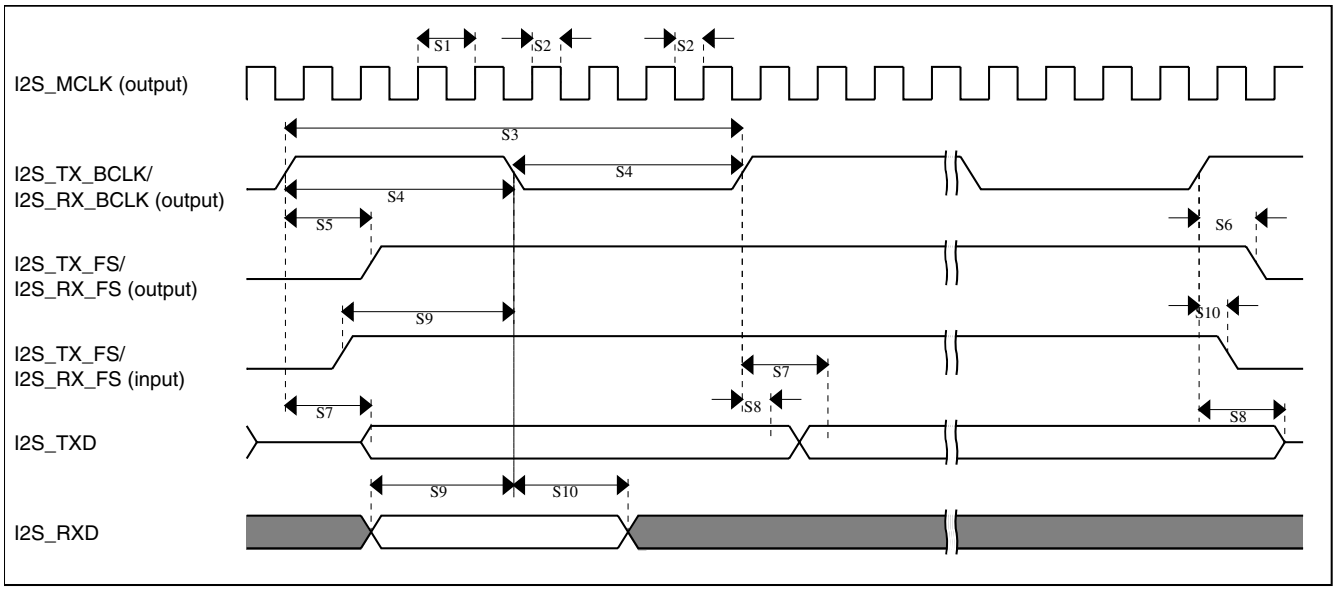

Figure 25. I2S/SAI timing — master modes

Table 44. I2S/SAI slave mode timing in Normal Run, Wait and Stop modes (full voltage range)

Num.	Characteristic	Min.	Max.	Unit
	Operating voltage	1.71	3.6	V
S11	I2S_TX_BCLK/I2S_RX_BCLK cycle time (input)	80	—	ns
S12	I2S_TX_BCLK/I2S_RX_BCLK pulse width high/low (input)	45%	55%	MCLK period
S13	I2S_TX_FS/I2S_RX_FS input setup before I2S_TX_BCLK/I2S_RX_BCLK	5.8	—	ns
S14	I2S_TX_FS/I2S_RX_FS input hold after I2S_TX_BCLK/I2S_RX_BCLK	2	—	ns
S15	I2S_TX_BCLK to I2S_TXD/I2S_TX_FS output valid	—	20.6	ns
S16	I2S_TX_BCLK to I2S_TXD/I2S_TX_FS output invalid	0	—	ns
S17	I2S_RXD setup before I2S_RX_BCLK	5.8	—	ns
S18	I2S_RXD hold after I2S_RX_BCLK	2	—	ns
S19	I2S_TX_FS input assertion to I2S_TXD output valid[1]	—	25	ns

1. Applies to first bit in each frame and only if the TCR4[FSE] bit is clear

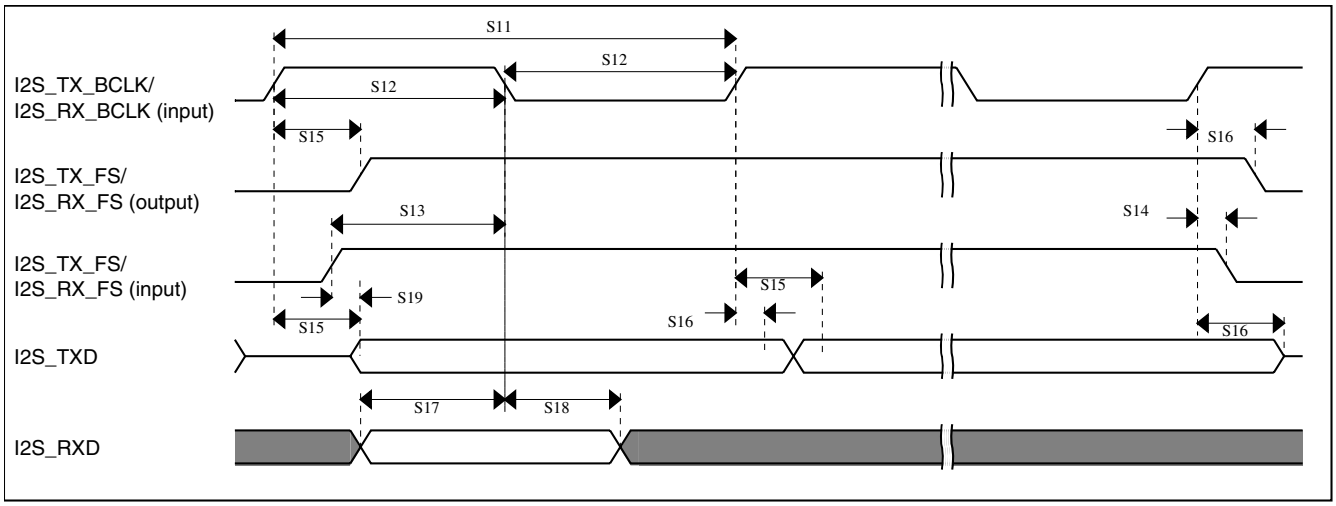

Figure 26. I2S/SAI timing — slave modes

6.8.9.2 VLPR, VLPW, and VLPS mode performance over the full operating voltage range

This section provides the operating performance over the full operating voltage for the device in VLPR, VLPW, and VLPS modes.

Table 45. I2S/SAI master mode timing in VLPR, VLPW, and VLPS modes (full voltage range)

Num.	Characteristic	Min.	Max.	Unit
	Operating voltage	1.71	3.6	V
S1	I2S_MCLK cycle time	62.5	—	ns
S2	I2S_MCLK pulse width high/low	45%	55%	MCLK period
S3	I2S_TX_BCLK/I2S_RX_BCLK cycle time (output)	250	—	ns
S4	I2S_TX_BCLK/I2S_RX_BCLK pulse width high/low	45%	55%	BCLK period
S5	I2S_TX_BCLK/I2S_RX_BCLK to I2S_TX_FS/ I2S_RX_FS output valid	—	45	ns
S6	I2S_TX_BCLK/I2S_RX_BCLK to I2S_TX_FS/ I2S_RX_FS output invalid	0	—	ns
S7	I2S_TX_BCLK to I2S_TXD valid	—	45	ns
S8	I2S_TX_BCLK to I2S_TXD invalid	0	—	ns
S9	I2S_RXD/I2S_RX_FS input setup before I2S_RX_BCLK	53	—	ns
S10	I2S_RXD/I2S_RX_FS input hold after I2S_RX_BCLK	0	—	ns

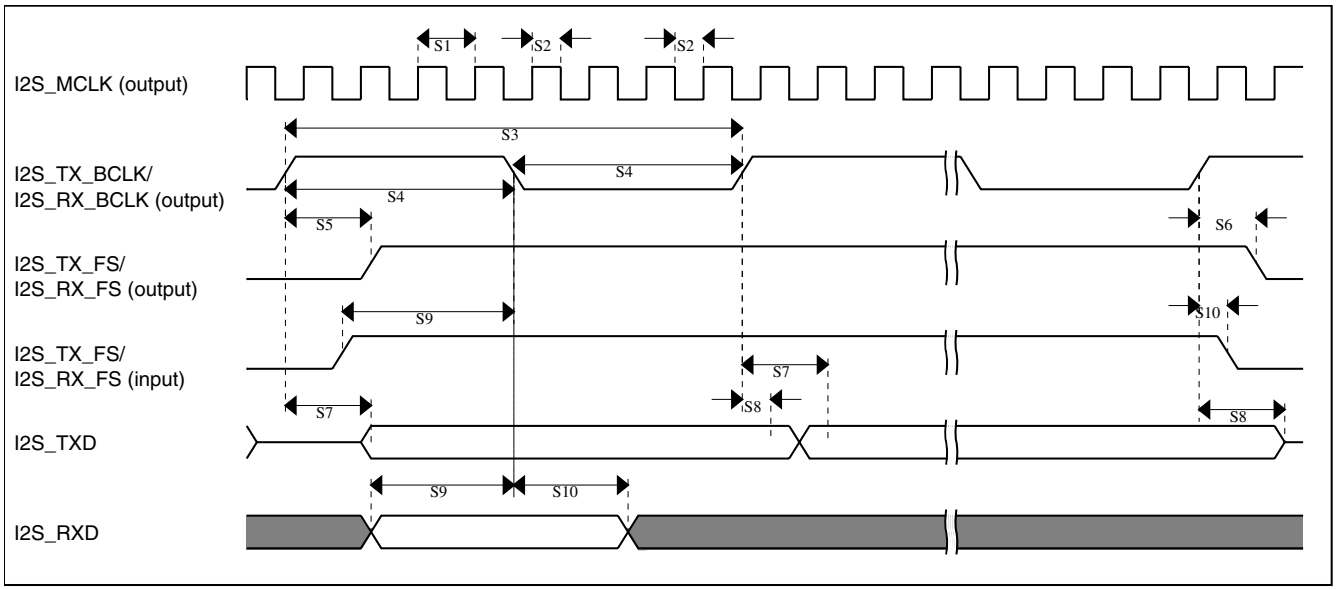

Figure 27. I2S/SAI timing — master modes

Table 46. I2S/SAI slave mode timing in VLPR, VLPW, and VLPS modes (full voltage range)

Num.	Characteristic	Min.	Max.	Unit
	Operating voltage	1.71	3.6	V
S11	I2S_TX_BCLK/I2S_RX_BCLK cycle time (input)	250	—	ns
S12	I2S_TX_BCLK/I2S_RX_BCLK pulse width high/low (input)	45%	55%	MCLK period
S13	I2S_TX_FS/I2S_RX_FS input setup before I2S_TX_BCLK/I2S_RX_BCLK	30	—	ns
S14	I2S_TX_FS/I2S_RX_FS input hold after I2S_TX_BCLK/I2S_RX_BCLK	7.6	—	ns
S15	I2S_TX_BCLK to I2S_TXD/I2S_TX_FS output valid	—	67	ns
S16	I2S_TX_BCLK to I2S_TXD/I2S_TX_FS output invalid	0	—	ns
S17	I2S_RXD setup before I2S_RX_BCLK	30	—	ns
S18	I2S_RXD hold after I2S_RX_BCLK	6.5	—	ns
S19	I2S_TX_FS input assertion to I2S_TXD output valid[1]	—	72	ns

1. Applies to first bit in each frame and only if the TCR4[FSE] bit is clear

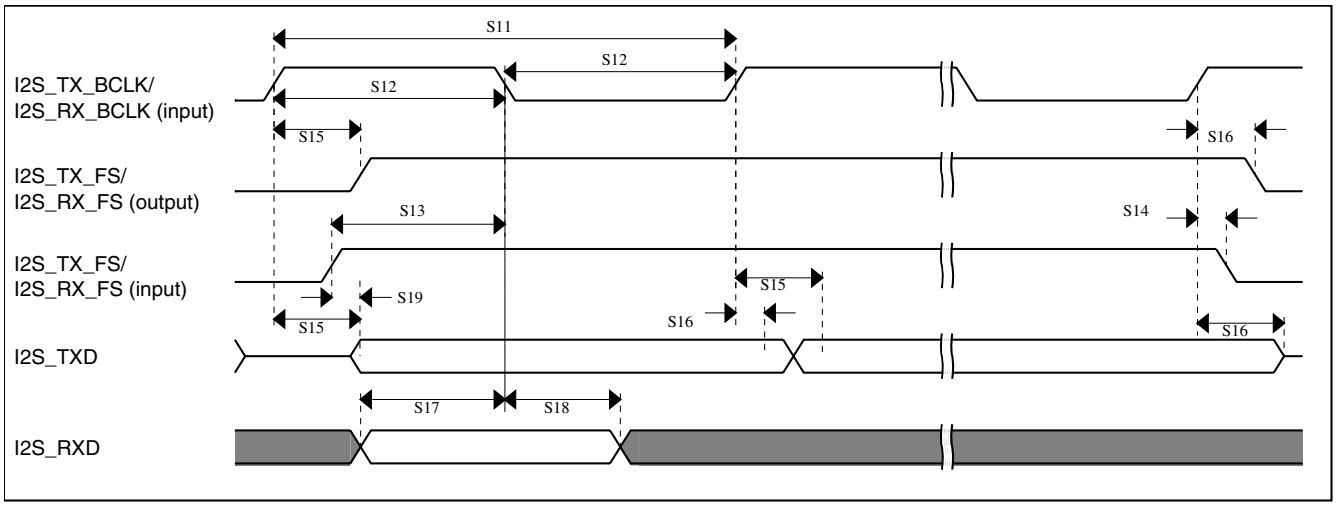

Figure 28. I2S/SAI timing — slave modes

6.9 Human-machine interfaces (HMI)

6.9.1 TSI electrical specifications

Table 47. TSI electrical specifications

Symbol	Description	Min.	Typ.	Max.	Unit	Notes
V_{DDTSI}	Operating voltage	1.71	—	3.6	V	
C_{ELE}	Target electrode capacitance range	1	20	500	pF	1
f_{REFmax}	Reference oscillator frequency	—	8	15	MHz	2, 3
f_{ELEmax}	Electrode oscillator frequency	—	1	1.8	MHz	2, 4
C_{REF}	Internal reference capacitor	—	1	—	pF	
V_{DELTA}	Oscillator delta voltage	—	500	—	mV	2, 5
I_{REF}	Reference oscillator current source base current • 2 μA setting (REFCHRG = 0) • 32 μA setting (REFCHRG = 15)	— —	2 36	3 50	μA	2, 6
I_{ELE}	Electrode oscillator current source base current • 2 μA setting (EXTCHRG = 0) • 32 μA setting (EXTCHRG = 15)	— —	2 36	3 50	μA	2, 7
Pres5	Electrode capacitance measurement precision	—	8.3333	38400	fF/count	8
Pres20	Electrode capacitance measurement precision	—	8.3333	38400	fF/count	9
Pres100	Electrode capacitance measurement precision	—	8.3333	38400	fF/count	10
MaxSens	Maximum sensitivity	0.003	12.5	—	fF/count	11
Res	Resolution	—	—	16	bits	

Table continues on the next page...

Table 47. TSI electrical specifications (continued)

Symbol	Description	Min.	Typ.	Max.	Unit	Notes
T_{Con20}	Response time @ 20 pF	8	15	25	μs	12
I_{TSI_RUN}	Current added in run mode	—	55	—	μA	
I_{TSI_LP}	Low power mode current adder	—	1.3	2.5	μA	13

1. The TSI module is functional with capacitance values outside this range. However, optimal performance is not guaranteed.
2. Fixed external capacitance of 20 pF.
3. REFCHRG = 2, EXTCHRG=0.
4. REFCHRG = 0, EXTCHRG = 10.
5. V_{DD} = 3.0 V.
6. The programmable current source value is generated by multiplying the SCANC[REFCHRG] value and the base current.
7. The programmable current source value is generated by multiplying the SCANC[EXTCHRG] value and the base current.
8. Measured with a 5 pF electrode, reference oscillator frequency of 10 MHz, PS = 128, NSCN = 8; Iext = 16.
9. Measured with a 20 pF electrode, reference oscillator frequency of 10 MHz, PS = 128, NSCN = 2; Iext = 16.
10. Measured with a 20 pF electrode, reference oscillator frequency of 10 MHz, PS = 16, NSCN = 3; Iext = 16.
11. Sensitivity defines the minimum capacitance change when a single count from the TSI module changes, it is equal to (C_{ref} * I_{ext})/(I_{ref} * PS * NSCN). Sensitivity depends on the configuration used. The typical value listed is based on the following configuration: Iext = 6 μA (EXTCHRG = 2), PS = 128, NSCN = 2, $I_{ref} = 16$ μA (REFCHRG = 7), C_{ref} = 1.0 pF. The minimum sensitivity describes the smallest possible capacitance that can be measured by a single count (this is the best sensitivity but is described as a minimum because it's the smallest number). The minimum sensitivity parameter is based on the following configuration: $I_{ext} = 2$ μA (EXTCHRG = 0), PS = 128, NSCN = 32, $I_{ref} = 32$ μA (REFCHRG = 15).
12. Time to do one complete measurement of the electrode. Sensitivity resolution of 0.0133 pF, PS = 0, NSCN = 0, 1 electrode, EXTCHRG = 7.
13. REFCHRG=0, EXTCHRG=4, PS=7, NSCN=0F, LPSCNITV=F, LPO is selected (1 kHz), and fixed external capacitance of 20 pF. Data is captured with an average of 7 periods window.

7 Dimensions

7.1 Obtaining package dimensions

Package dimensions are provided in package drawings.

To find a package drawing, go to http://www.freescale.com and perform a keyword search for the drawing's document number:

If you want the drawing for this package	Then use this document number
80-pin LQFP	98ASS23174W
81-pin MAPBGA	98ASA00344D

8 Pinout

8.1 K20 Signal Multiplexing and Pin Assignments

The following table shows the signals available on each pin and the locations of these pins on the devices supported by this document. The Port Control Module is responsible for selecting which ALT functionality is available on each pin.

81 MAP BGA	80 LQFP	Pin Name	Default	ALT0	ALT1	ALT2	ALT3	ALT4	ALT5	ALT6	ALT7	EzPort
E4	1	PTE0	ADC1_SE4a	ADC1_SE4a	PTE0	SPI1_PCS1	UART1_TX			I2C1_SDA	RTC_CLKOUT	
E3	2	PTE1/ LLWU_P0	ADC1_SE5a	ADC1_SE5a	PTE1/ LLWU_P0	SPI1_SOUT	UART1_RX			I2C1_SCL	SPI1_SIN	
E2	3	PTE2/ LLWU_P1	ADC1_SE6a	ADC1_SE6a	PTE2/ LLWU_P1	SPI1_SCK	UART1_CTS_ b					
F4	4	PTE3	ADC1_SE7a	ADC1_SE7a	PTE3	SPI1_SIN	UART1_RTS_ b				SPI1_SOUT	
E7	—	VDD	VDD	VDD								
F7	—	VSS	VSS	VSS								
H7	5	PTE4/ LLWU_P2	DISABLED		PTE4/ LLWU_P2	SPI1_PCS0	UART3_TX					
G4	6	PTE5	DISABLED		PTE5	SPI1_PCS2	UART3_RX					
E6	7	VDD	VDD	VDD								
G7	8	VSS	VSS	VSS								
L6	—	VSS	VSS	VSS								
F1	9	USB0_DP	USB0_DP	USB0_DP								
F2	10	USB0_DM	USB0_DM	USB0_DM								
G1	11	VOUT33	VOUT33	VOUT33								
G2	12	VREGIN	VREGIN	VREGIN								
K1	13	PGA0_DP/ ADC0_DP0/ ADC1_DP3	PGA0_DP/ ADC0_DP0/ ADC1_DP3	PGA0_DP/ ADC0_DP0/ ADC1_DP3								
K2	14	PGA0_DM/ ADC0_DM0/ ADC1_DM3	PGA0_DM/ ADC0_DM0/ ADC1_DM3	PGA0_DM/ ADC0_DM0/ ADC1_DM3								
L1	15	PGA1_DP/ ADC1_DP0/ ADC0_DP3	PGA1_DP/ ADC1_DP0/ ADC0_DP3	PGA1_DP/ ADC1_DP0/ ADC0_DP3								
L2	16	PGA1_DM/ ADC1_DM0/ ADC0_DM3	PGA1_DM/ ADC1_DM0/ ADC0_DM3	PGA1_DM/ ADC1_DM0/ ADC0_DM3								
F5	17	VDDA	VDDA	VDDA								
G5	18	VREFH	VREFH	VREFH								
G6	19	VREFL	VREFL	VREFL								
F6	20	VSSA	VSSA	VSSA								
L3	21	VREF_OUT/ CMP1_IN5/ CMP0_IN5/ ADC1_SE18	VREF_OUT/ CMP1_IN5/ CMP0_IN5/ ADC1_SE18	VREF_OUT/ CMP1_IN5/ CMP0_IN5/ ADC1_SE18								

81 MAP BGA	80 LQFP	Pin Name	Default	ALT0	ALT1	ALT2	ALT3	ALT4	ALT5	ALT6	ALT7	EzPort
K5	22	DAC0_OUT/ CMP1_IN3/ ADC0_SE23	DAC0_OUT/ CMP1_IN3/ ADC0_SE23	DAC0_OUT/ CMP1_IN3/ ADC0_SE23								
L7	—	RTC_ WAKEUP_B	RTC_ WAKEUP_B	RTC_ WAKEUP_B								
L4	23	XTAL32	XTAL32	XTAL32								
L5	24	EXTAL32	EXTAL32	EXTAL32								
K6	25	VBAT	VBAT	VBAT								
J6	26	PTA0	JTAG_TCLK/ SWD_CLK/ EZP_CLK	TSI0_CH1	PTA0	UART0_CTS_ b/ UART0_COL_ b	FTM0_CH5				JTAG_TCLK/ SWD_CLK	EZP_CLK
H8	27	PTA1	JTAG_TDI/ EZP_DI	TSI0_CH2	PTA1	UART0_RX	FTM0_CH6				JTAG_TDI	EZP_DI
J7	28	PTA2	JTAG_TDO/ TRACE_SWO/ EZP_DO	TSI0_CH3	PTA2	UART0_TX	FTM0_CH7				JTAG_TDO/ TRACE_SWO	EZP_DO
H9	29	PTA3	JTAG_TMS/ SWD_DIO	TSI0_CH4	PTA3	UART0_RTS_ b	FTM0_CH0				JTAG_TMS/ SWD_DIO	
J8	30	PTA4/ LLWU_P3	NMI_b/ EZP_CS_b	TSI0_CH5	PTA4/ LLWU_P3		FTM0_CH1				NMI_b	EZP_CS_b
K7	31	PTA5	DISABLED		PTA5	USB_CLKIN	FTM0_CH2		CMP2_OUT	I2S0_TX_ BCLK	JTAG_TRST_ b	
E5	—	VDD	VDD	VDD								
G3	—	VSS	VSS	VSS								
K8	32	PTA12	CMP2_IN0	CMP2_IN0	PTA12	CAN0_TX	FTM1_CH0			I2S0_TXD0	FTM1_QD_ PHA	
L8	33	PTA13/ LLWU_P4	CMP2_IN1	CMP2_IN1	PTA13/ LLWU_P4	CAN0_RX	FTM1_CH1			I2S0_TX_FS	FTM1_QD_ PHB	
K9	34	PTA14	DISABLED		PTA14	SPI0_PCS0	UART0_TX			I2S0_RX_ BCLK	I2S0_TXD1	
L9	35	PTA15	DISABLED		PTA15	SPI0_SCK	UART0_RX			I2S0_RXD0		
J10	36	PTA16	DISABLED		PTA16	SPI0_SOUT	UART0_CTS_ b/ UART0_COL_ b			I2S0_RX_FS	I2S0_RXD1	
H10	37	PTA17	ADC1_SE17	ADC1_SE17	PTA17	SPI0_SIN	UART0_RTS_ b			I2S0_MCLK		
L10	38	VDD	VDD	VDD								
K10	39	VSS	VSS	VSS								
L11	40	PTA18	EXTAL0	EXTAL0	PTA18		FTM0_FLT2	FTM_CLKIN0				
K11	41	PTA19	XTAL0	XTAL0	PTA19		FTM1_FLT0	FTM_CLKIN1		LPTMR0_ ALT1		
J11	42	RESET_b	RESET_b	RESET_b								
G11	43	PTB0/ LLWU_P5	ADC0_SE8/ ADC1_SE8/ TSI0_CH0	ADC0_SE8/ ADC1_SE8/ TSI0_CH0	PTB0/ LLWU_P5	I2C0_SCL	FTM1_CH0			FTM1_QD_ PHA		

81 MAP BGA	80 LQFP	Pin Name	Default	ALT0	ALT1	ALT2	ALT3	ALT4	ALT5	ALT6	ALT7	EzPort
G10	44	PTB1	ADC0_SE9/ ADC1_SE9/ TSI0_CH6	ADC0_SE9/ ADC1_SE9/ TSI0_CH6	PTB1	I2C0_SDA	FTM1_CH1			FTM1_QD_ PHB		
G9	45	PTB2	ADC0_SE12/ TSI0_CH7	ADC0_SE12/ TSI0_CH7	PTB2	I2C0_SCL	UART0_RTS_ b			FTM0_FLT3		
G8	46	PTB3	ADC0_SE13/ TSI0_CH8	ADC0_SE13/ TSI0_CH8	PTB3	I2C0_SDA	UART0_CTS_ b/ UART0_COL_ b			FTM0_FLT0		
D10	47	PTB10	ADC1_SE14	ADC1_SE14	PTB10	SPI1_PCS0	UART3_RX		FB_AD19	FTM0_FLT1		
C10	48	PTB11	ADC1_SE15	ADC1_SE15	PTB11	SPI1_SCK	UART3_TX		FB_AD18	FTM0_FLT2		
—	49	VSS	VSS	VSS								
—	50	VDD	VDD	VDD								
B10	51	PTB16	TSI0_CH9	TSI0_CH9	PTB16	SPI1_SOUT	UART0_RX		FB_AD17	EWM_IN		
E9	52	PTB17	TSI0_CH10	TSI0_CH10	PTB17	SPI1_SIN	UART0_TX		FB_AD16	EWM_OUT_b		
D9	53	PTB18	TSI0_CH11	TSI0_CH11	PTB18	CAN0_TX	FTM2_CH0	I2S0_TX_ BCLK	FB_AD15	FTM2_QD_ PHA		
C9	54	PTB19	TSI0_CH12	TSI0_CH12	PTB19	CAN0_RX	FTM2_CH1	I2S0_TX_FS	FB_OE_b	FTM2_QD_ PHB		
B9	55	PTC0	ADC0_SE14/ TSI0_CH13	ADC0_SE14/ TSI0_CH13	PTC0	SPI0_PCS4	PDB0_EXTRG		FB_AD14	I2S0_TXD1		
D8	56	PTC1/ LLWU_P6	ADC0_SE15/ TSI0_CH14	ADC0_SE15/ TSI0_CH14	PTC1/ LLWU_P6	SPI0_PCS3	UART1_RTS_ b	FTM0_CH0	FB_AD13	I2S0_TXD0		
C8	57	PTC2	ADC0_SE4b/ CMP1_IN0/ TSI0_CH15	ADC0_SE4b/ CMP1_IN0/ TSI0_CH15	PTC2	SPI0_PCS2	UART1_CTS_ b	FTM0_CH1	FB_AD12	I2S0_TX_FS		
B8	58	PTC3/ LLWU_P7	CMP1_IN1	CMP1_IN1	PTC3/ LLWU_P7	SPI0_PCS1	UART1_RX	FTM0_CH2	CLKOUT	I2S0_TX_ BCLK		
—	59	VSS	VSS	VSS								
—	60	VDD	VDD	VDD								
A8	61	PTC4/ LLWU_P8	DISABLED		PTC4/ LLWU_P8	SPI0_PCS0	UART1_TX	FTM0_CH3	FB_AD11	CMP1_OUT		
D7	62	PTC5/ LLWU_P9	DISABLED		PTC5/ LLWU_P9	SPI0_SCK	LPTMR0_ ALT2	I2S0_RXD0	FB_AD10	CMP0_OUT		
C7	63	PTC6/ LLWU_P10	CMP0_IN0	CMP0_IN0	PTC6/ LLWU_P10	SPI0_SOUT	PDB0_EXTRG	I2S0_RX_ BCLK	FB_AD9	I2S0_MCLK		
B7	64	PTC7	CMP0_IN1	CMP0_IN1	PTC7	SPI0_SIN	USB_SOF_ OUT	I2S0_RX_FS	FB_AD8			
A7	65	PTC8	ADC1_SE4b/ CMP0_IN2	ADC1_SE4b/ CMP0_IN2	PTC8			I2S0_MCLK	FB_AD7			
D6	66	PTC9	ADC1_SE5b/ CMP0_IN3	ADC1_SE5b/ CMP0_IN3	PTC9			I2S0_RX_ BCLK	FB_AD6	FTM2_FLT0		
C6	67	PTC10	ADC1_SE6b	ADC1_SE6b	PTC10	I2C1_SCL		I2S0_RX_FS	FB_AD5			
C5	68	PTC11/ LLWU_P11	ADC1_SE7b	ADC1_SE7b	PTC11/ LLWU_P11	I2C1_SDA		I2S0_RXD1	FB_RW_b			
—	69	VSS	VSS	VSS								

81 MAP BGA	80 LQFP	Pin Name	Default	ALT0	ALT1	ALT2	ALT3	ALT4	ALT5	ALT6	ALT7	EzPort
—	70	VDD	VDD	VDD								
D5	71	PTC16	DISABLED		PTC16		UART3_RX		FB_CS5_b/ FB_TSIZ1/ FB_BE23_16_ BLS15_8_b			
C4	72	PTC17	DISABLED		PTC17		UART3_TX		FB_CS4_b/ FB_TSIZ0/ FB_BE31_24_ BLS7_0_b			
D4	73	PTD0/ LLWU_P12	DISABLED		PTD0/ LLWU_P12	SPI0_PCS0	UART2_RTS_ b		FB_ALE/ FB_CS1_b/ FB_TS_b			
D3	74	PTD1	ADC0_SE5b	ADC0_SE5b	PTD1	SPI0_SCK	UART2_CTS_ b		FB_CS0_b			
C3	75	PTD2/ LLWU_P13	DISABLED		PTD2/ LLWU_P13	SPI0_SOUT	UART2_RX		FB_AD4			
B3	76	PTD3	DISABLED		PTD3	SPI0_SIN	UART2_TX		FB_AD3			
A3	77	PTD4/ LLWU_P14	DISABLED		PTD4/ LLWU_P14	SPI0_PCS1	UART0_RTS_ b	FTM0_CH4	FB_AD2	EWM_IN		
A2	78	PTD5	ADC0_SE6b	ADC0_SE6b	PTD5	SPI0_PCS2	UART0_CTS_ b/ UART0_COL_ b	FTM0_CH5	FB_AD1	EWM_OUT_b		
B2	79	PTD6/ LLWU_P15	ADC0_SE7b	ADC0_SE7b	PTD6/ LLWU_P15	SPI0_PCS3	UART0_RX	FTM0_CH6	FB_AD0	FTM0_FLT0		
A1	80	PTD7	DISABLED		PTD7	CMT_IRO	UART0_TX	FTM0_CH7		FTM0_FLT1		
A11	—	NC	NC	NC								
B11	—	NC	NC	NC								
C11	—	NC	NC	NC								
K3	—	NC	NC	NC								
H4	—	NC	NC	NC								
F3	—	NC	NC	NC								
H1	—	NC	NC	NC								
H2	—	NC	NC	NC								
J1	—	NC	NC	NC								
J2	—	NC	NC	NC								
J3	—	NC	NC	NC								
H3	—	NC	NC	NC								
K4	—	NC	NC	NC								
H5	—	NC	NC	NC								
J5	—	NC	NC	NC								
H6	—	NC	NC	NC								
J9	—	NC	NC	NC								
J4	—	NC	NC	NC								
H11	—	NC	NC	NC								

81 MAP BGA	80 LQFP	Pin Name	Default	ALT0	ALT1	ALT2	ALT3	ALT4	ALT5	ALT6	ALT7	EzPort
F11	—	NC	NC	NC								
E11	—	NC	NC	NC								
D11	—	NC	NC	NC								
E10	—	NC	NC	NC								
F10	—	NC	NC	NC								
F9	—	NC	NC	NC								
F8	—	NC	NC	NC								
E8	—	NC	NC	NC								
B6	—	NC	NC	NC								
A6	—	NC	NC	NC								
A5	—	NC	NC	NC								
B5	—	NC	NC	NC								
B4	—	NC	NC	NC								
A4	—	NC	NC	NC								
A10	—	NC	NC	NC								
A9	—	NC	NC	NC								
B1	—	NC	NC	NC								
C2	—	NC	NC	NC								
C1	—	NC	NC	NC								
D2	—	NC	NC	NC								
D1	—	NC	NC	NC								
E1	—	NC	NC	NC								

8.2 K20 Pinouts

The below figure shows the pinout diagram for the devices supported by this document. Many signals may be multiplexed onto a single pin. To determine what signals can be used on which pin, see the previous section.

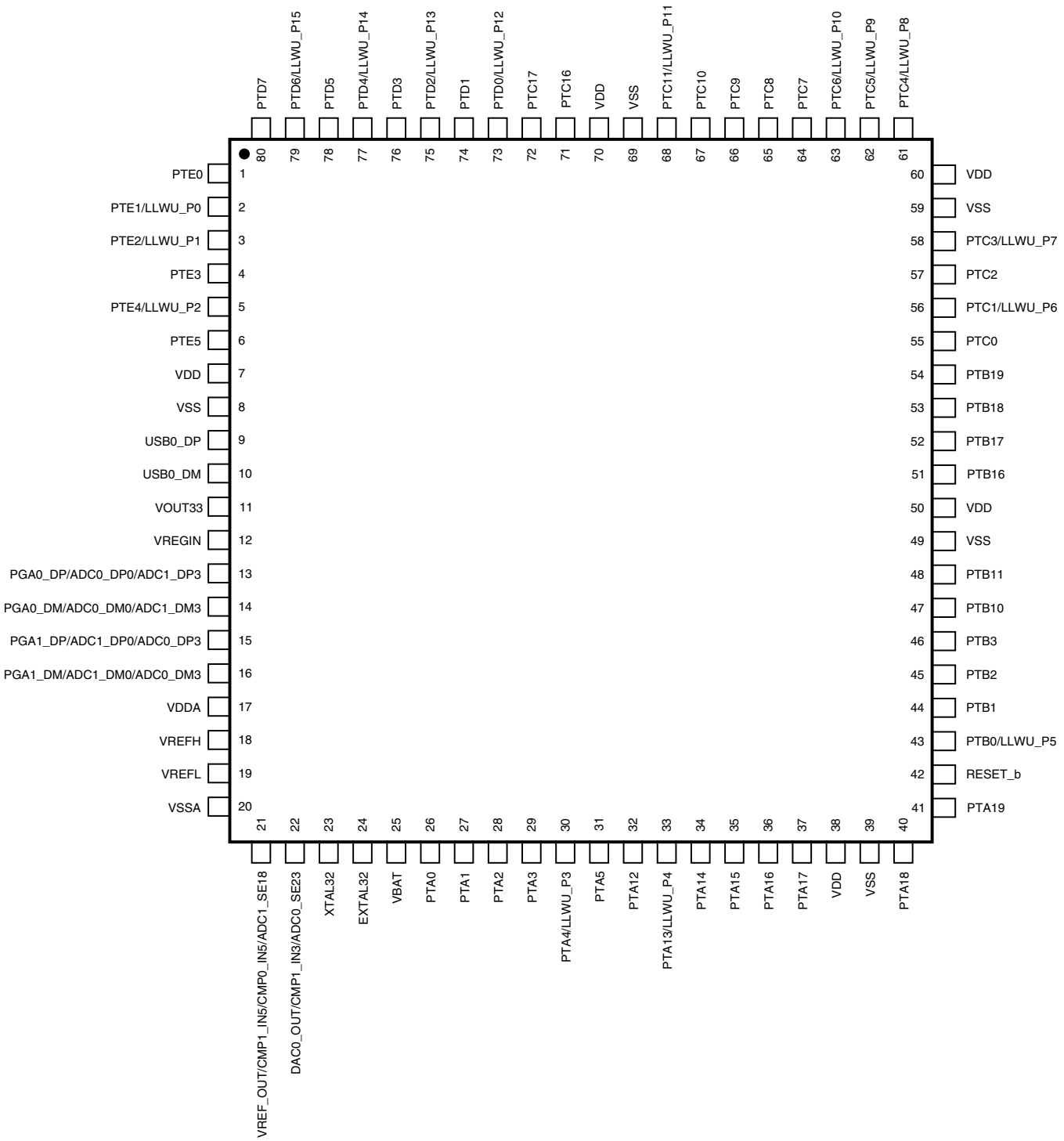

Figure 29. K20 80 LQFP Pinout Diagram

	1	2	3	4	5	6	7	8	9	10	11	
A	PTD7	PTD5	PTD4/ LLWU_P14	NC	NC	NC	PTC8	PTC4/ LLWU_P8	NC	NC	NC	A
B	NC	PTD6/ LLWU_P15	PTD3	NC	NC	NC	PTC7	PTC3/ LLWU_P7	PTC0	PTB16	NC	B
C	NC	NC	PTD2 LLWU_P13	PTC17	PTC11/ LLWU_P11	PTC10	PTC6/ LLWU_P10	PTC2	PTB19	PTB11	NC	C
D	NC	NC	PTD1	PTD0/ LLWU_P12	PTC16	PTC9	PTC5/ LLWU_P9	PTC1/ LLWU_P6	PTB18	PTB10	NC	D
E	NC	PTE2/ LLWU_P1	PTE1/ LLWU_P0	PTE0	VDD	VDD	VDD	NC	PTB17	NC	NC	E
F	USB0_DP	USB0_DM	NC	PTE3	VDDA	VSSA	VSS	NC	NC	NC	NC	F
G	VOUT33	VREGIN	VSS	PTE5	VREFH	VREFL	VSS	PTB3	PTB2	PTB1	PTB0/ LLWU_P5	G
H	NC	NC	NC	NC	NC	NC	PTE4/ LLWU_P2	PTA1	PTA3	PTA17	NC	H
J	NC	NC	NC	NC	NC	PTA0	PTA2	PTA4/ LLWU_P3	NC	PTA16	RESET_b	J
K	PGA0_DP/ ADC0_DP0/ ADC1_DP3	PGA0_DM/ ADC0_DM0/ ADC1_DM3	NC	NC	DAC0_OUT/ CMP1_IN3/ ADC0_SE23	VBAT	PTA5	PTA12	PTA14	VSS	PTA19	K
L	PGA1_DP/ ADC1_DP0/ ADC0_DP3	PGA1_DM/ ADC1_DM0/ ADC0_DM3	VREF_OUT/ CMP1_IN5/ CMP0_IN5/ ADC1_SE18	XTAL32	EXTAL32	VSS	RTC WAKEUP_B	PTA13/ LLWU_P4	PTA15	VDD	PTA18	L
	1	2	3	4	5	6	7	8	9	10	11	

Figure 30. K20 81 MAPBGA Pinout Diagram

9 Revision History

The following table provides a revision history for this document.

Table 48. Revision History

Rev. No.	Date	Substantial Changes
1	3/2012	Initial public release

Table continues on the next page...

Table 48. Revision History (continued)

Rev. No.	Date	Substantial Changes
2	4/2012	• Replaced TBDs throughout. • Updated "Power consumption operating behaviors" table. • Updated "ADC electrical specifications" section. • Updated "VREF full-range operating behaviors" table. • Updated "I2S/SAI Switching Specifications" section. • Updated "TSI electrical specifications" table.

How to Reach Us:

Home Page:
www.freescale.com

Web Support:
http://www.freescale.com/support

USA/Europe or Locations Not Listed:
Freescale Semiconductor
Technical Information Center, EL516
2100 East Elliot Road
Tempe, Arizona 85284
+1-800-521-6274 or +1-480-768-2130
www.freescale.com/support

Europe, Middle East, and Africa:
Freescale Halbleiter Deutschland GmbH
Technical Information Center
Schatzbogen 7
81829 Muenchen, Germany
+44 1296 380 456 (English)
+46 8 52200080 (English)
+49 89 92103 559 (German)
+33 1 69 35 48 48 (French)
www.freescale.com/support

Japan:
Freescale Semiconductor Japan Ltd.
Headquarters
ARCO Tower 15F
1-8-1, Shimo-Meguro, Meguro-ku,
Tokyo 153-0064
Japan
0120 191014 or +81 3 5437 9125
support.japan@freescale.com

Asia/Pacific:
Freescale Semiconductor China Ltd.
Exchange Building 23F
No. 118 Jianguo Road
Chaoyang District
Beijing 100022
China
+86 10 5879 8000
support.asia@freescale.com

Information in this document is provided solely to enable system and software implementers to use Freescale Semiconductors products. There are no express or implied copyright licenses granted hereunder to design or fabricate any integrated circuits or integrated circuits based on the information in this document.

Freescale Semiconductor reserves the right to make changes without further notice to any products herein. Freescale Semiconductor makes no warranty, representation, or guarantee regarding the suitability of its products for any particular purpose, nor does Freescale Semiconductor assume any liability arising out of the application or use of any product or circuit, and specifically disclaims any liability, including without limitation consequential or incidental damages. "Typical" parameters that may be provided in Freescale Semiconductor data sheets and/or specifications can and do vary in different applications and actual performance may vary over time. All operating parameters, including "Typicals", must be validated for each customer application by customer's technical experts. Freescale Semiconductor does not convey any license under its patent rights nor the rights of others. Freescale Semiconductor products are not designed, intended, or authorized for use as components in systems intended for surgical implant into the body, or other applications intended to support or sustain life, or for any other application in which failure of the Freescale Semiconductor product could create a situation where personal injury or death may occur. Should Buyer purchase or use Freescale Semiconductor products for any such unintended or unauthorized application, Buyer shall indemnify Freescale Semiconductor and its officers, employees, subsidiaries, affiliates, and distributors harmless against all claims, costs, damages, and expenses, and reasonable attorney fees arising out of, directly or indirectly, any claim of personal injury or death associated with such unintended or unauthorized use, even if such claims alleges that Freescale Semiconductor was negligent regarding the design or manufacture of the part.

RoHS-compliant and/or Pb-free versions of Freescale products have the functionality and electrical characteristics as their non-RoHS-complaint and/or non-Pb-free counterparts. For further information, see http://www.freescale.com or contact your Freescale sales representative.

For information on Freescale's Environmental Products program, go to http://www.freescale.com/epp.

Freescale™ and the Freescale logo are trademarks of Freescale Semiconductor, Inc. All other product or service names are the property of their respective owners.

© 2012 Freescale Semiconductor, Inc.

Document Number: K20P81M72SF1
Rev. 2, 4/2012